FRONT AXLE

CONTENTS

GENERAL INFORMATION 2

SERVICE SPECIFICATIONS 4

LUBRICANTS 4

SEALANTS AND ADHESIVES 5

SPECIAL TOOLS 5

ON-VEHICLE SERVICE 10

- Wheel Bearing Axial Play Check 10
- Front Axle Total Backlash Check 10
- Front Axle Gear Oil Level Check 11
- Hub Bolt Replacement 11
- Differential Carrier Oil Seal Replacement 11
- Solenoid Valve Operation Check 12

HUB AND KNUCKLE ASSEMBLY 14

DRIVE SHAFT 19

MAIN SHAFT 26

DIFFERENTIAL CARRIER 28

FREE-WHEELING CLUTCH ASSEMBLY 45

SOLENOID VALVE, VACUUM PIPES AND VACUUM TANK 48

FRONT DIFFERENTIAL MOUNT 50

GENERAL INFORMATION

The front axle consists of the hub assembly, drive shaft, inner shaft, front differential, and free-wheeling clutch.
The features are:

- The free-wheeling mechanism enables 2WD and 4WD to be switched over during driving, thus improving fuel efficiency and reducing vibration at the 2WD mode.
- The drive shaft uses a B.J.-D.O.J.-type constant velocity ball joint which has high power transmission efficiency and reduces vibration and noise.
- For vehicles with ABS, the ABS rotor for detecting the wheel speed has been pressed in the B.J. joint.
- The axle is supported by the ball bearing and the front hub, which is pressed in the knuckle axle housing.
- The ball bearing is of a double-row angular contact ball bearing which features high thrust load resistance.
- The differential carrier is supported elastically at three points, thus reducing vibration and noise.

FRONT AXLE

Item			Specifications
Wheel bearing	Type		Double-row angular contact ball bearing
	Bearing (O.D. × I.D.) mm		74 × 40
Drive shaft	Joint type	Outer	B.J.
		Inner	D.O.J.
	Shaft length* × Shaft diameter mm	Right side	316 × 24
		Left side	435 × 24
Inner shaft	Shaft length × Shaft diameter mm		383 × 25
	Bearing (O.D. × I.D.) mm		62 × 35

NOTE
*: shows the distance between the centres of the joints.

FRONT DIFFERENTIAL

Item			Specifications
Drive gear type			Hypoid gear
Reduction ratio			4.875
Differential gear type			Straight bevel gear
Number of teeth	Drive gear		39
	Drive pinion		8
	Side gear		14
	Pinion gear		10
Bearing (O.D. × I.D.) mm		Side	72.0 × 35.0
		Front	62.0 × 25.0
		Rear	72.0 × 35.0

CONSTRUCTION DIAGRAM

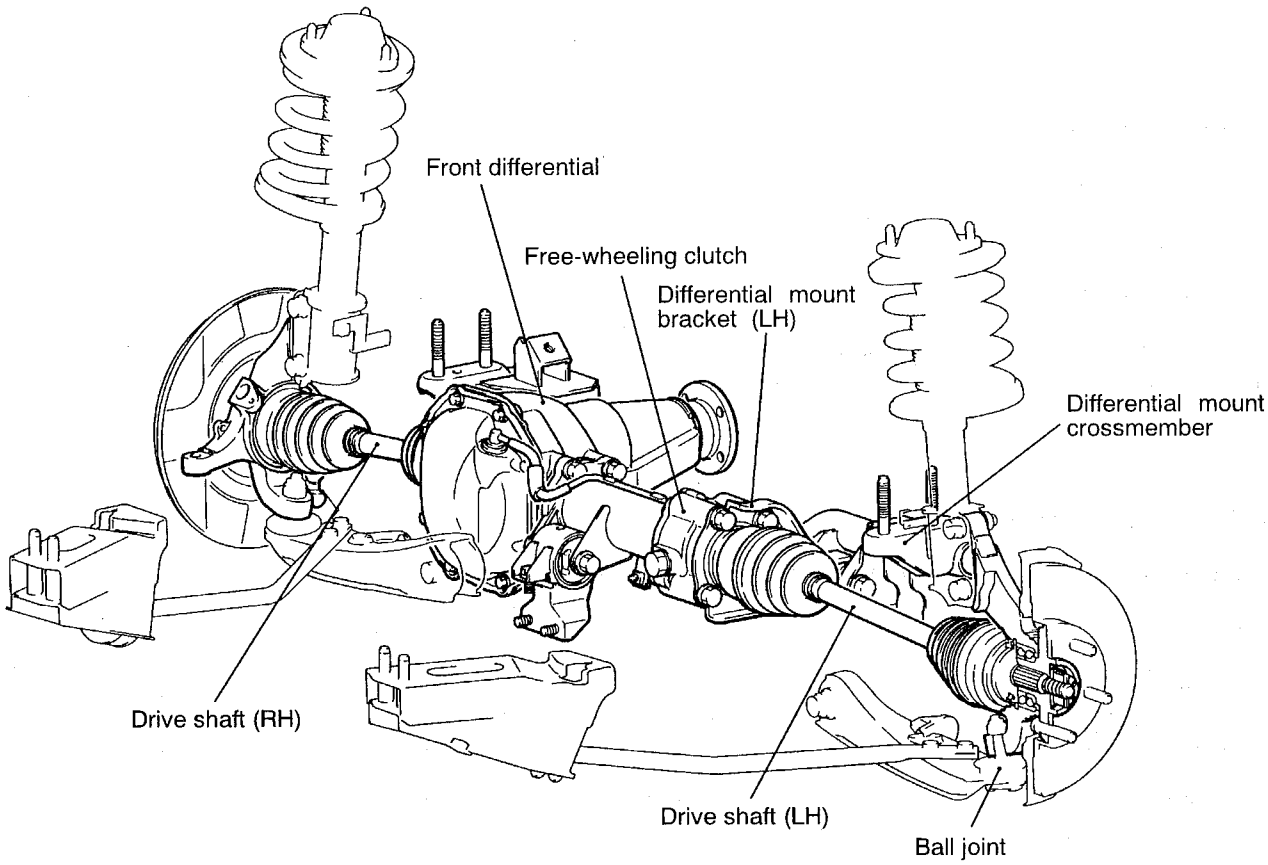

W0003AL

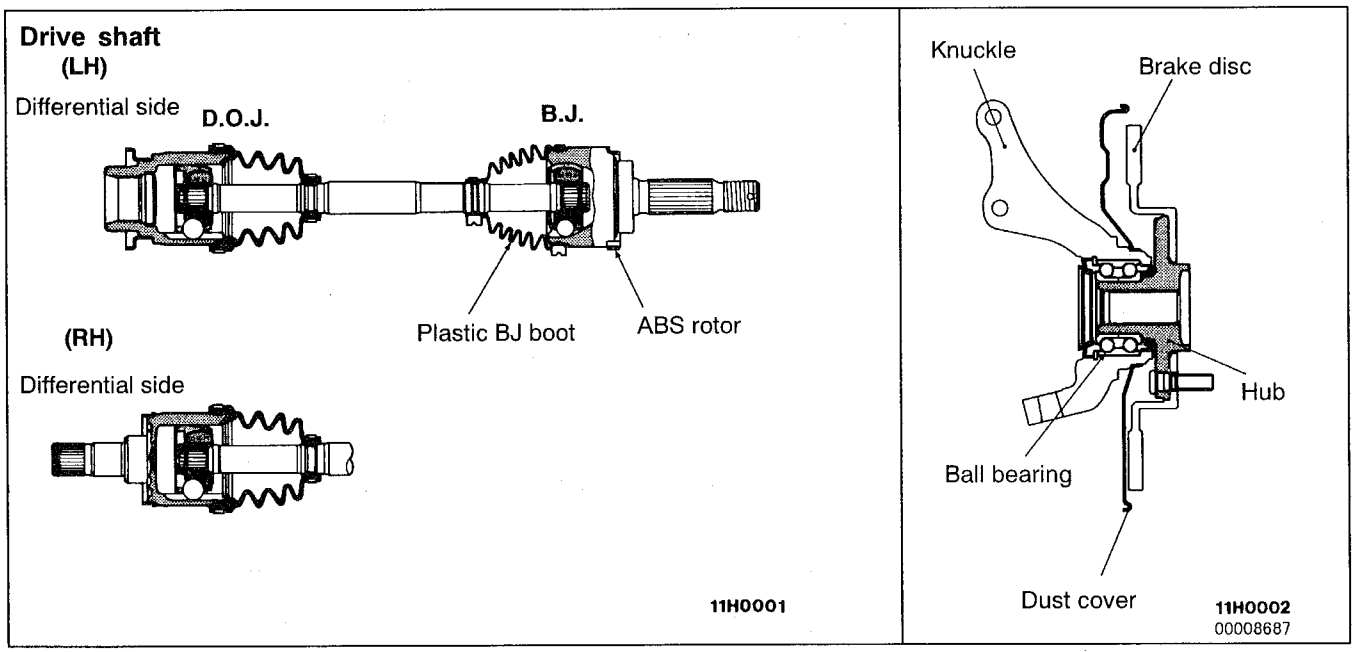

SERVICE SPECIFICATIONS

Items			Standard value	Limit
Front axle total backlash mm			–	5
Hub axial play mm			–	0.2
Solenoid valve resistance Ω			36 – 46	–
Hub rotation starting torque Nm			1.6	–
Setting of D.O.J. boot length mm			80 ± 3	–
Special tool (MB991561) opening dimension mm		With B.J. boot band (small) crimped	2.9	–
		With B.J. boot band (large) crimped	3.2	–
B.J. boot crimping dimension mm			2.4 – 2.8	–
Clearance between B.J. boot (large) and step on B.J. housing mm			0.1 – 1.55	–
Final drive gear backlash mm			0.11 – 0.16	–
Drive gear runout mm			–	0.05
Differential gear backlash mm			0 – 0.076	0.2
Drive pinion turning torque Nm	Without oil seal	When replacing (with anti-rust agent)	0.88 – 1.17 *1, 0.29 – 0.49*2	–
		When replacing or reusing (with gear oil applied)	0.39 – 0.49*1 0.147 – 0.245*2	–
	With oil seal	When replacing (with anti-rust agent)	0.98 – 1.27*1 0.49 – 0.69*2	–
		When replacing or reusing (with gear oil applied)	0.49 – 0.58*1 0.343 – 0.441*2	–

NOTE
*1: 4G93-M/T
*2: 4G18, 4G93-A/T

LUBRICANTS

Items		Specified lubricants	Quantity
Gear oil	Front differential	Hypoid gear oil API classification GL-5 or higher SAE viscosity No.90, 80W	0.83 ℓ
	Free-wheeling clutch		0.12 ℓ
D.O.J.		Repair kit grease	Approx.100 g
B.J.		Repair kit grease	Approx.120 g

SEALANTS AND ADHESIVES

Items	Specified sealants and adhesives	Remarks
Front housing assembly and free-wheeling hosing assembly	3M ATD Part No.8663 or equivalent	Semi-drying sealant
Front housing assembly and differential carrier		
Vent plug		
Differential cover		
Drive gear and differential case mating surface	3M Stud Locking 4170 or equivalent	Anaerobic sealant

SPECIAL TOOLS

Tool	Number	Name	Use
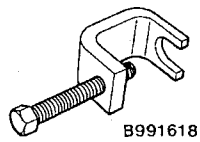 B991618	MB991618	Hub bolt remover	Hub bolt removal
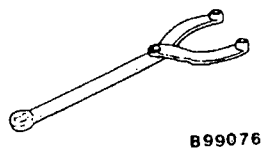 B990767	MB990767	Front hub and flange yoke holder	Hub fixing
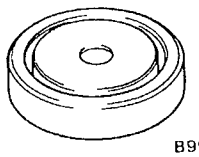 B990955	MB991115	Oil seal installer	• Front axle hub oil seal press-fitting (Used together with MB990938) • Housing tube dust seal press-fitting
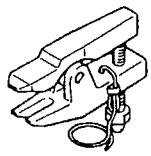 B991113	MB991406 or MB991113	Steering linkage puller	Ball joint disconnection
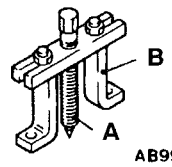 AB990241	MB990241 A: MB990242 B: MB990244	Axle shaft puller A: Puller shaft B: Puller bar	Drive shaft removal
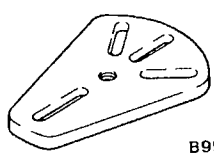 B991354	MB991354	Puller body	

Tool	Number	Name	Use
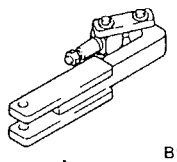 B991056	MB991056 or MB991355	Knuckle arm bridge	Hub removal
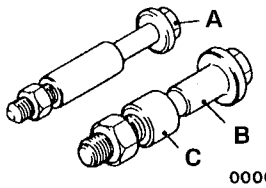 00005697	A: MB991017 B: MB990998 C: MB991000	A, B: Front hub remover and installer C: Spacer	• Hub removal and press-fitting. • Wheel bearing provisional holding (MB991000, which belongs to MB990998, should be used as a spacer.)
 B990810	MB990810	Side bearing puller	• Side bearing inner race removal • Companion flange removal
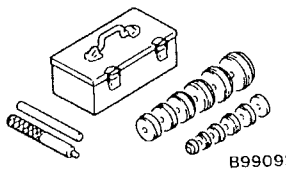 B990925	MB990925	Bearing and oil seal installer set	• Outer wheel bearing inner race installation • Oil seal installation • Front housing assembly oil seal installation • Drive pinion front and rear bearing outer race removal and installation • Final drive gear backlash check
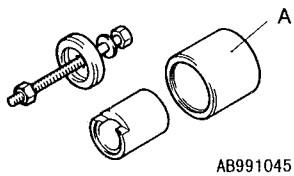 AB991045	MB991045 A: MB991050	Bush remover installer A: Base (B)	Wheel bearing pressing-in (Used together with base B)
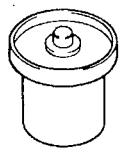 B991387	MB991387	Bush remover installer	Outer oil seal pressing-in
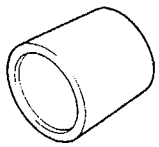 B991389	MB991389	Bush remover base	Inner oil seal pressing-in
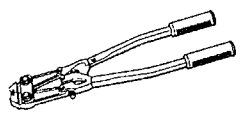	MB991561	Boot band clipping tool	Plastic boot band installation

Tool	Number	Name	Use
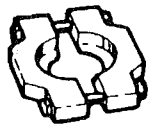	MB990673	Front bearing remover	Bearing removal
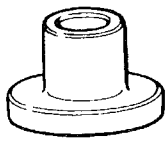	MB990663	Rear axle shaft bearing and retainer ring installer	Bearing installation
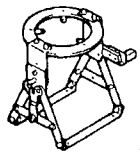 B990909	MB990909	Working base assembly	Differential carrier fixing
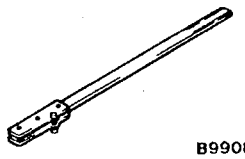 B990850	MB990850	End yoke holder	Companion flange removal and installation
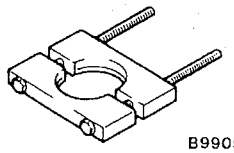 B990560	MB990560	Rear axle shaft bearing remover	Drive pinion bearing inner race removal
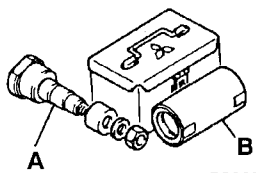 A B AB990835	MB990835 A: MB990836 B: MB990392	Dummy pinion set A: Drive pinion gauge assembly B: Cylinder gauge	• Drive pinion rotation starting torque check • Drive pinion height measurement <4G18, 4G93-A/T>
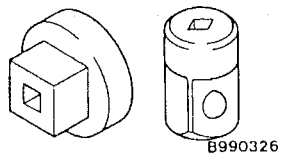 B990326	MB990326	Pre-load socket	Drive pinion turning torque measurement
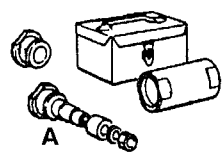 A	MB990901 A: MB990903	Pinion height gauge set	Pinion height adjustment <4G93-M/T>
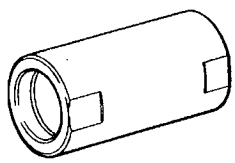	MB991170	Cylinder gauge	Pinion height adjustment <4G93-M/T>

Tool	Number	Name	Use
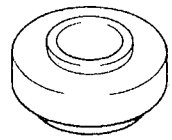 B990829	MB990829	Pinion and side bearing installer	• Drive pinion rear bearing inner race pressing-in • Side bearing inner race pressing-in
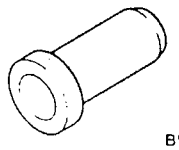 B990727	MB990727	Oil seal installer	Drive pinion oil seal pressing-in
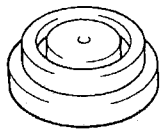 B991015	MB991015	Knuckle oil seal installer	Oil seal pressing-in
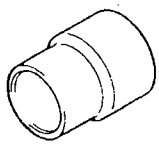 B990799	MB990799	Ball joint remover and installer	Free-wheeling clutch gear and bearing installation
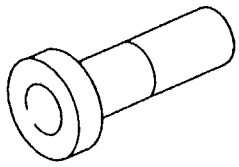	MD999547	Oil seal installer	Front differential mount insulator <front> removal
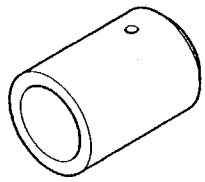	MD999570	Crankshaft front oil seal installer	Front differential mount insulator <rear> removal
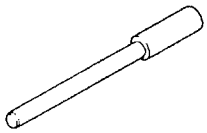 B990947	MB990947	Lower arm bushing arbour	Front differential mount insulator <front> pressing-in
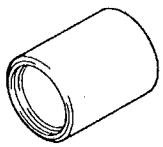 B990847	MB990847	Rear suspension bushing remover and installer base	
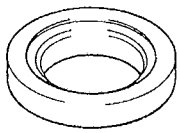 B990884	MB990981	Mount bushing remover and installer ring	

Tool	Number	Name	Use
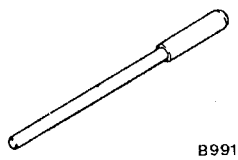 B991318	MB991318	Lower arm bushing arbour	Front differential mount insulator <rear> pressing-in
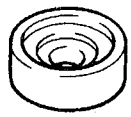	MB991183	Bushing arbour	
	MB990843	Drag link bushing remover and installer	
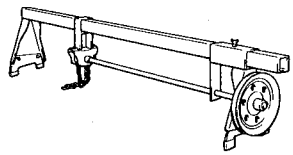	GENERAL SERVICE TOOL MZ203826 or MZ203827	Engine lifter	Supporting the engine assembly when the differential carrier is removed and installed

MB990925

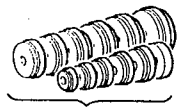

A
Installer adapter

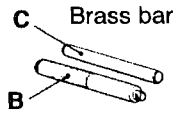

Bar (snap-in type)

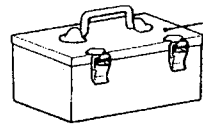

A11W0113

Type	Tool number	O.D. mm	Type	Tool number	O.D. mm
A	MB990926	39	A	MB990933	63.5
	MB990927	45		MB990934	67.5
	MB990928	49.5		MB990935	71.5
	MB990929	51		MB990936	75.5
	MB990930	54		MB990937	79
	MB990931	57	B	MB990938	–
	MB990932	61	C	MB990939	–

ON-VEHICLE SERVICE

WHEEL BEARING AXIAL PLAY CHECK

1. Remove the disc brake caliper and suspend it with a wire.
2. Remove the brake disc from the front hub.

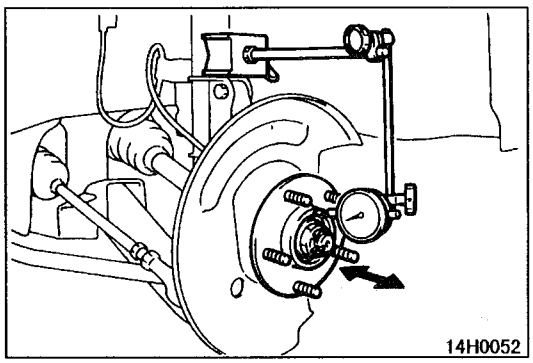

3. Attach a dial gauge as shown in the illustration, and then measure the axial play while moving the hub in the axial direction.

   Limit: 0.2 mm

4. If axial play exceeds the limit, disassemble the hub and knuckle to inspect each component.

FRONT AXLE TOTAL BACKLASH CHECK

If the propeller shaft is rotated by hand while the ignition switch is OFF, the front wheel actuator will lock the front wheels. To prevent this, follow the procedures below:

1. Turn the ignition switch to the OFF position, and then place the transfer shift lever in the 2H position to lock the front wheels.

   Caution
   Do not jack up the vehicle.

2. Rotate the propeller shaft until a click is heard to lock the free-wheeling differential.
3. Rotate the propeller shaft fully clockwise, and then make mating marks on the companion flange dust cover and the gear carrier.

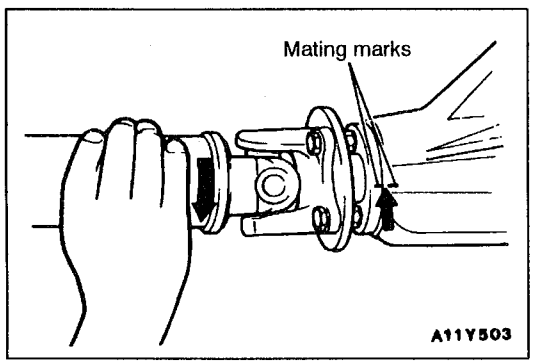

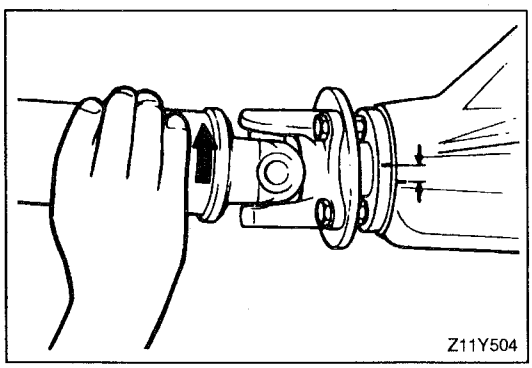

4. Rotate the propeller shaft fully anticlockwise, and measure the difference between the mating marks with a scale.

   Limit: 5 mm

5. If the measured value exceeds the limit value, check the following.
   - Final drive gear backlash
   - Differential gear backlash
   - Play in the serrations and spline of the side gears, drive shaft, inner shaft and drive flange

FRONT AXLE GEAR OIL LEVEL CHECK

Top up the specified gear oil if the gear oil level does not reach the bottom of the filler plug.

Specified gear oil:

Hypoid gear oil API classification GL-5 or higher, SAE viscosity No.90, 80W

Capacity:

Front differential: Approx. 0.83 ℓ

Free-wheeling clutch: 0.12 ℓ

NOTE

SAE 90 for 10 °C or higher, SAE80 for 10 °C or lower

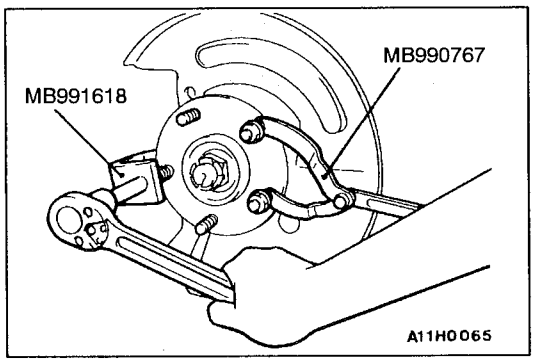

HUB BOLT REPLACEMENT

1. Rotate the hub to align each hub bolt with the cutout section of the dust cover, and push out each hub bolt while locking the hub with the special tool.

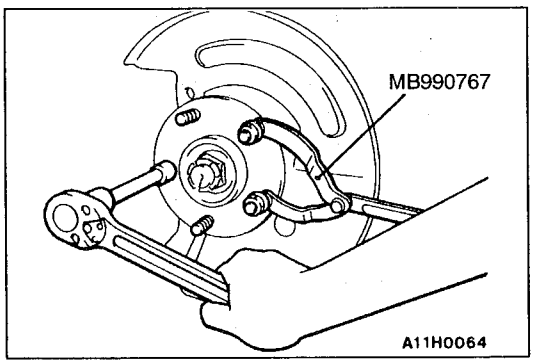

2. To press in the hub bolt, install each hub bolt at the cutout section of the dust cover, and tighten the hub bolt with the hub nut as shown.

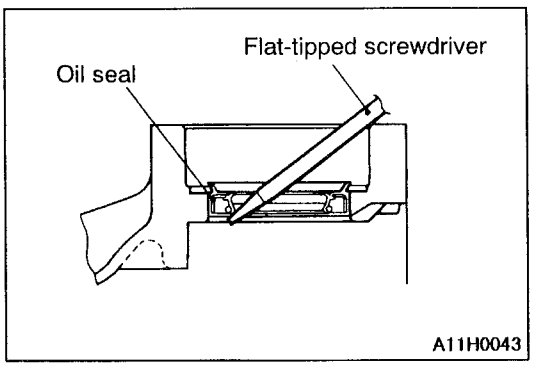

DIFFERENTIAL CARRIER OIL SEAL REPLACEMENT

1. Remove the front housing assembly. (Refer to P.26-26.)
2. Remove the drive shaft <RH>. (Refer to P.26-19.)
3. Use a flat-tipped screwdriver or the like to remove the oil seal.

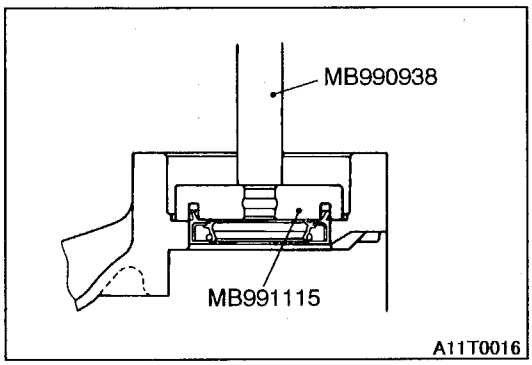

4. Use the special tools to install a new oil seal.

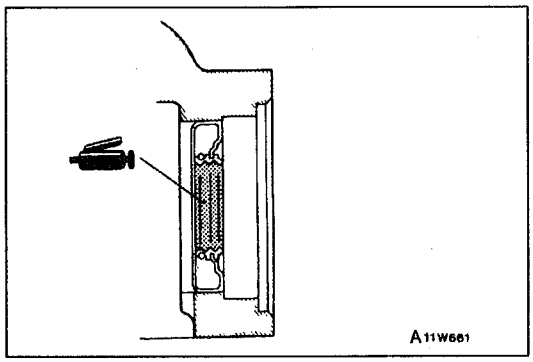

5. Apply multi-purpose grease to the oil seal lip, and then install the right drive shaft (Refer to P.26-19) and the front housing assembly (Refer to P.26-26).

Caution

(1). Be careful not to scratch the oil seal lip.
(2). Always replace the circlip, which is installed on the D.O.J.-side spline of the right drive shaft, with a new one.

SOLENOID VALVE OPERATION CHECK

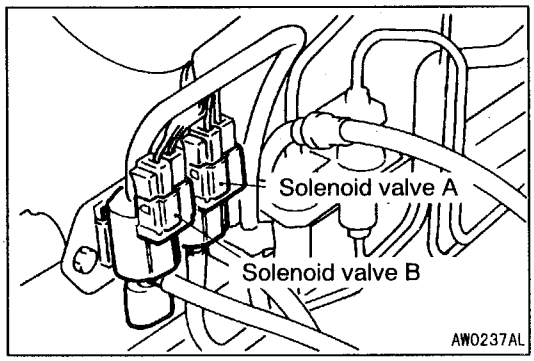

1. Remove the vacuum hoses (blue stripe, yellow stripe) from the solenoid valves.
2. Disconnect the harness connectors.

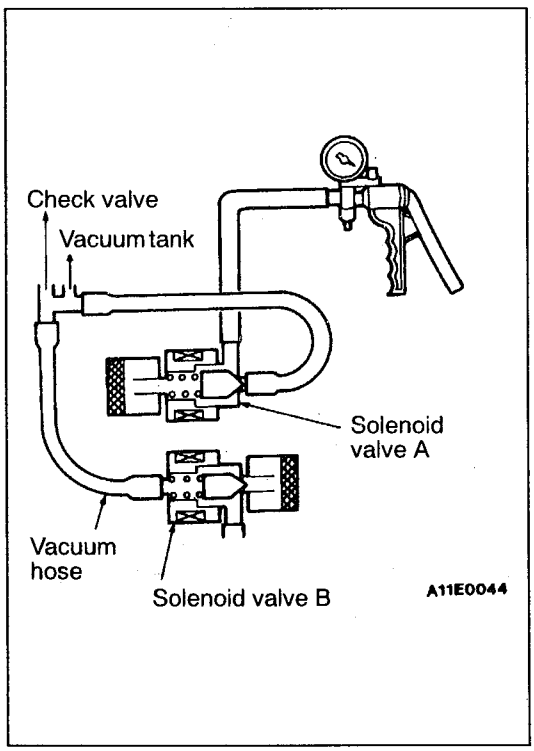

3. Connect a hand vacuum pump to solenoid valve A, and carry out the following inspections.
   (1) When battery voltage is not applied to any terminals, the negative pressure is not be held.
   (2) The negative pressure is not held when battery voltage is applied to solenoid valve A. However, when the vacuum hose of solenoid valve B is restricted by bending it, the pressure is held.
   (3) The negative pressure is held when battery voltage is applied to solenoid valves A and B.

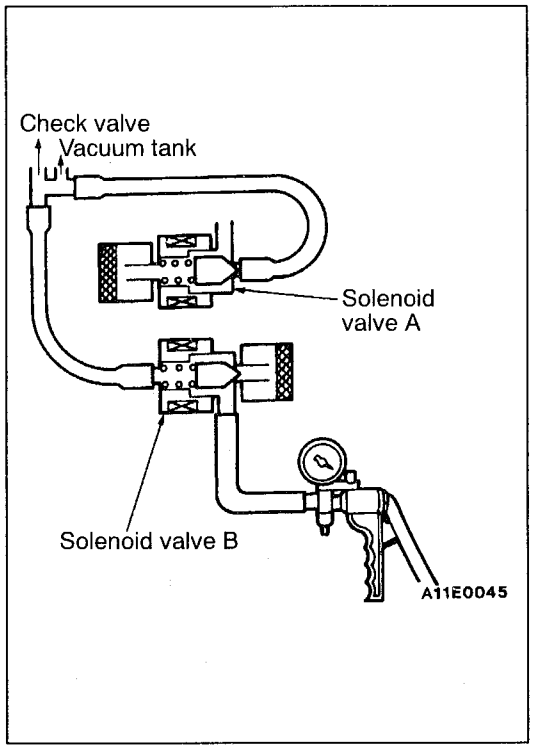

4. Connect a hand vacuum pump to solenoid valve B. Apply negative pressure and carry out the following inspections.
   (1) When battery voltage is not applied to any terminals, the negative pressure is held.
   (2) When battery voltage is applied to solenoid valve B, the negative pressure is not held.
   (3) When battery voltage is applied to solenoid valve A, the negative pressure is not held.
5. Measure the resistance of solenoid valves A and B.

   Standard value: 36 – 46 Ω

HUB AND KNUCKLE ASSEMBLY

REMOVAL AND INSTALLATION

Post-installation Operation
Press the Dust Cover with a Finger to Check Whether the Dust Cover is Cracked or Damaged.

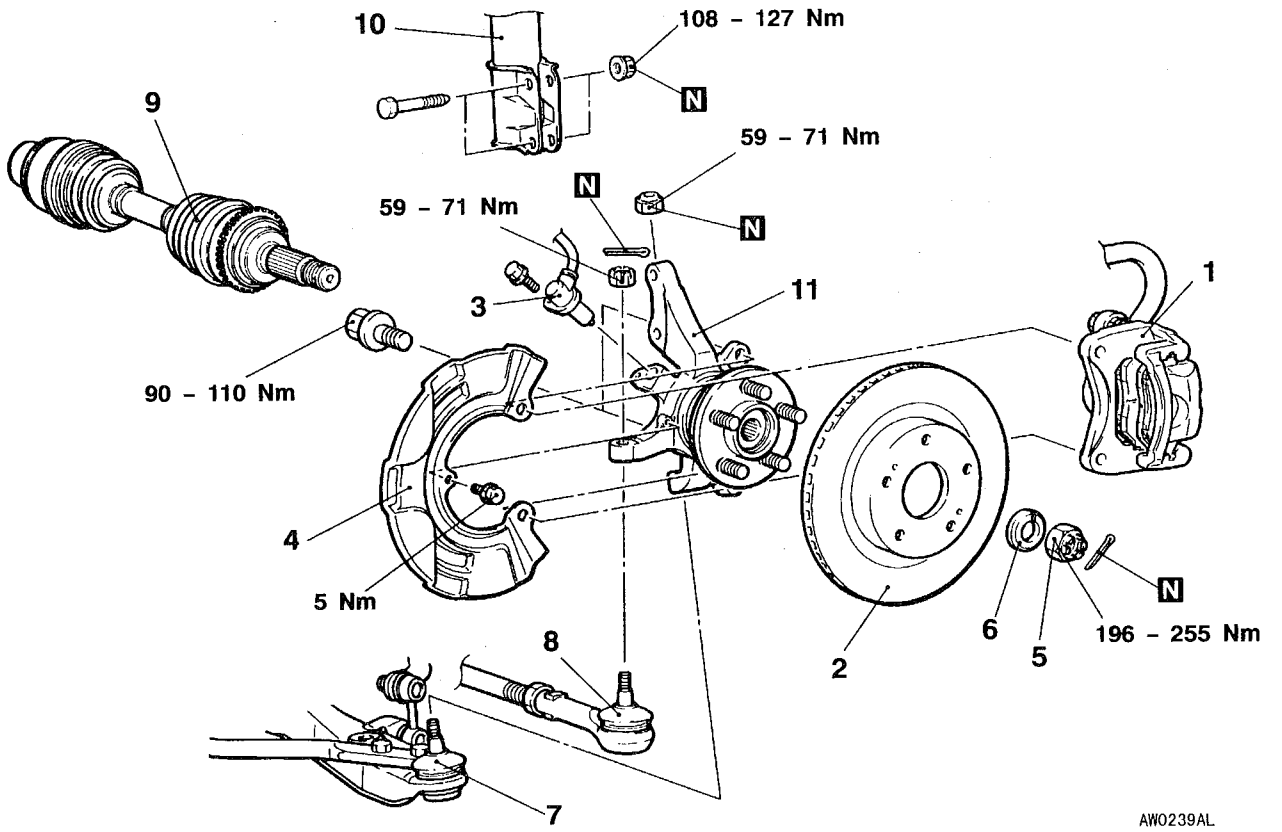

Removal steps

1. Disc brake assembly
2. Brake disc
3. Wheel speed sensor <Vehicles with ABS>
4. Dust cover
5. Castle nut
6. Washer
7. Lower arm and hub/knuckle assembly connection
8. Tie rod end and hub/knuckle assembly connection
9. Drive shaft and hub/knuckle assembly connection
10. Strut assembly and hub/knuckle assembly connection
11. Hub/knuckle assembly

◀A▶ ▶A◀ ◀A▶ ◀B▶ ◀B▶ ◀C▶

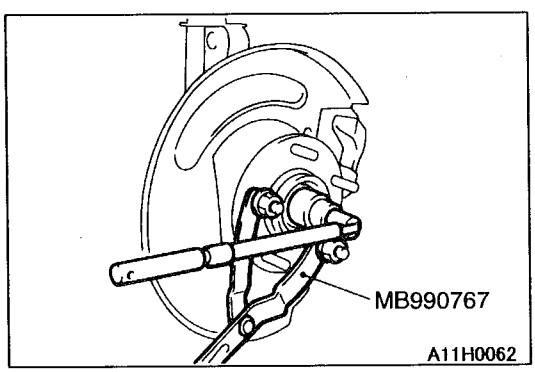

REMOVAL SERVICE POINTS

◀A▶ CASTLE NUT REMOVAL

Caution
Never apply the vehicle weight to the wheel bearing while the castle nut is loosened. If the vehicle weight is applied, the wheel bearing will be damaged.

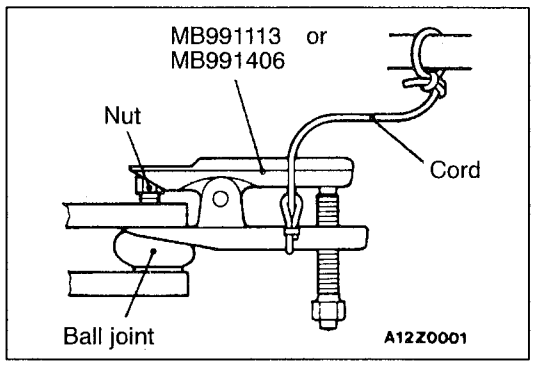

◀B▶ TIE ROD END/LOWER ARM REMOVAL

Caution

1. **Only loosen the ball joint nut, but do not remove it. Use the special tool.**
2. **Suspend the special tool with a cord to prevent it from dropping.**

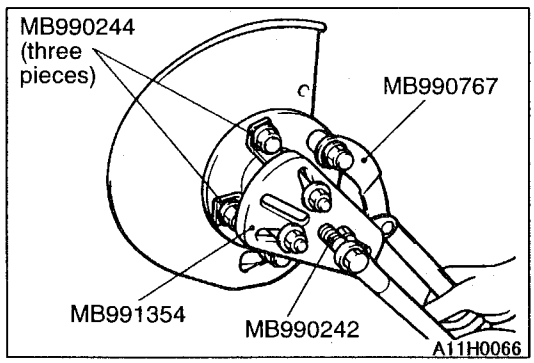

◀C▶ DRIVE SHAFT REMOVAL

Use the special tools when the drive shaft can not be separated from the knuckle easily due to seizure.

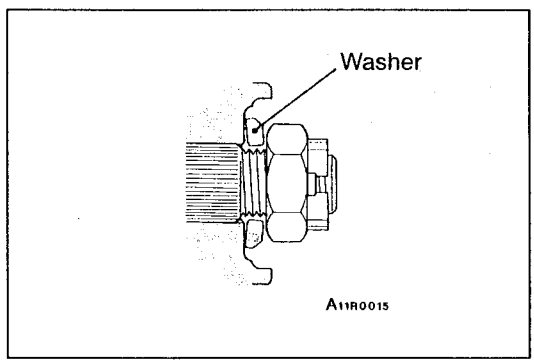

INSTALLATION SERVICE POINTS

▶A◀ WASHER/CASTLE NUT INSTALLATION

1. Face the chamfered side of the washer against the castle nut.

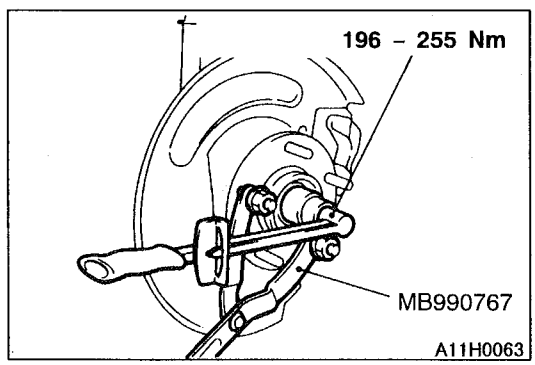

2. Use the special tool to tighten the castle nut securely.

   Caution

   Never apply the vehicle weight to the wheel bearing while the castle nut is loosened. If the vehicle weight is applied, the wheel bearing will be damaged.

3. If the split pin hole is not aligned with the castle nut slit, always tighten the nut further within a torque of 255 Nm, and assemble the split pin in the first aligned slit and the hole.

DISASSEMBLY AND REASSEMBLY

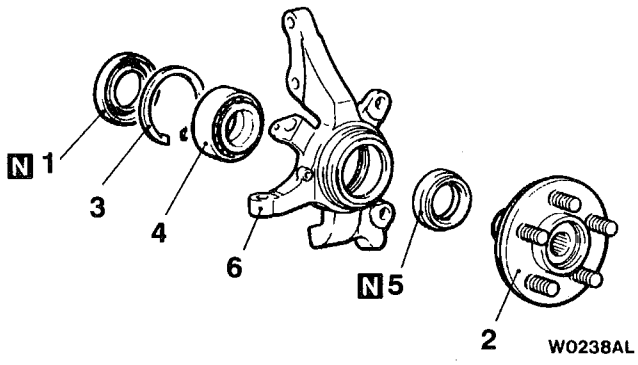

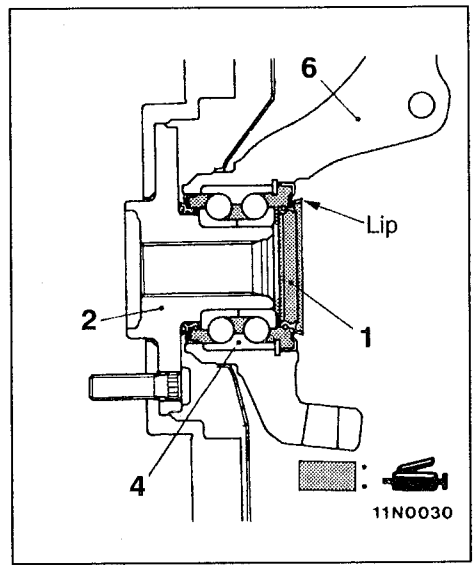

Disassembly steps

1. Inner oil seal
◀A▶ 2. Hub
3. Snap ring
◀B▶ 4. Wheel bearing
5. Outer oil seal
6. Knuckle

Reassembly steps

6. Knuckle
▶A◀ 4. Wheel bearing
3. Snap ring
▶B◀ 5. Outer oil seal
2. Hub
▶C◀ • Hub rotation starting torque check
▶D◀ • Hub axial play check
▶E◀ 1. Inner oil seal

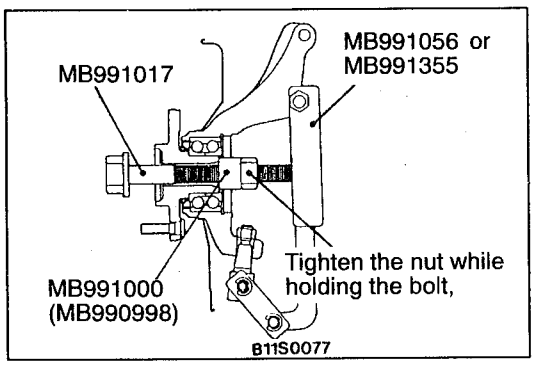

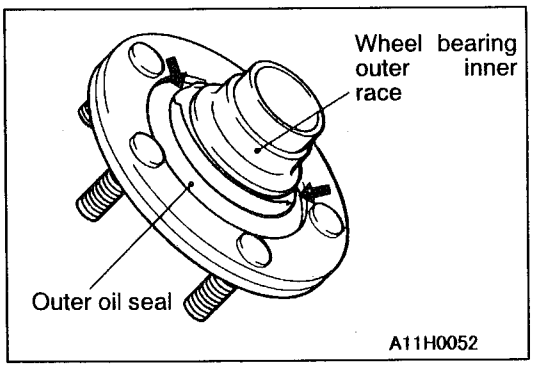

DISASSEMBLY SERVICE POINTS

◀A▶ HUB REMOVAL

Caution
When the hub is removed, the wheel bearing may be damaged. Therefore, if the hub is withdrawn, the wheel bearing should be always be replaced with a new one.

◀B▶ WHEEL BEARING REMOVAL

1. Pry the outer oil seal at the shown positions with a screwdriver so that the jaws of the special tool can hook the wheel bearing outer inner race.

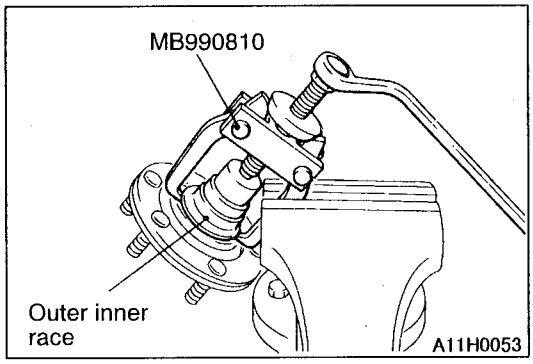

2. Use the special tool to remove the wheel bearing outer inner race from the hub.

Caution
Be careful not to drop the hub when the outer inner race is pressed out.

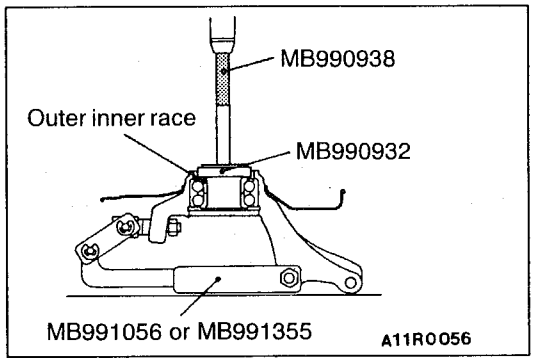

3. Assemble the removed outer inner race to the wheel bearing, and then use the special tools to remove the wheel bearing.

REASSEMBLY SERVICE POINTS

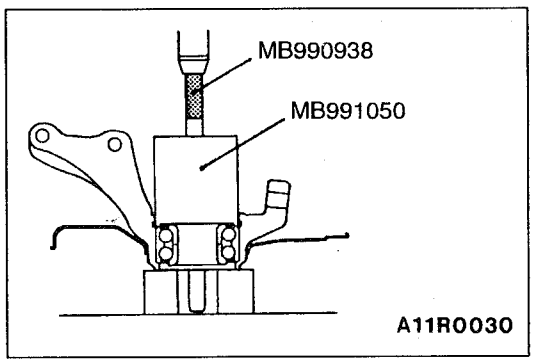

▶A◀ WHEEL BEARING INSTALLATION

Caution
When the wheel bearing is pressed in, its outer race should be pushed in.

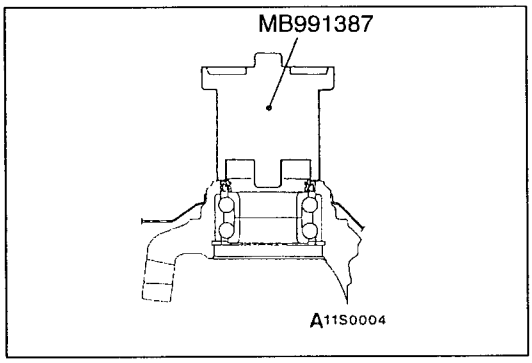

▶B◀ OUTER OIL SEAL INSTALLATION

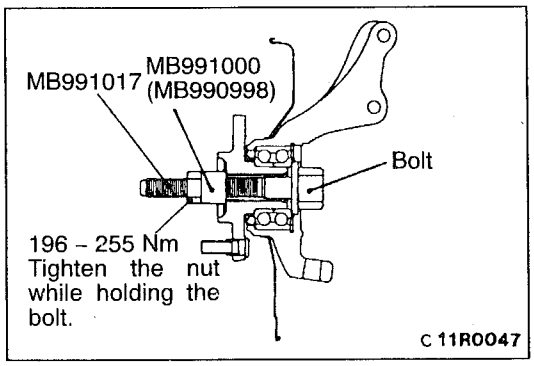

▶C◀ HUB ROTATION STARTING TORQUE CHECK

1. Tighten the special tools to the specified torque to press the hub into the knuckle.
2. Rotate the hub so that the hub is lubricated sufficiently.

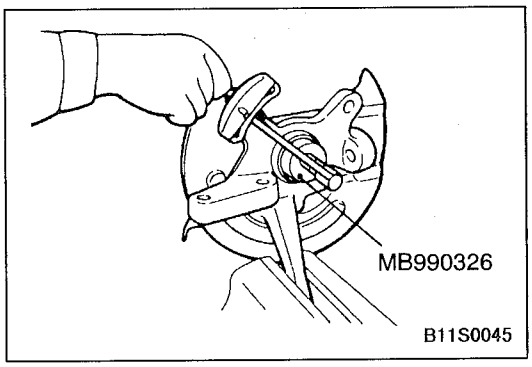

3. Use the special tool to measure the hub rotation starting torque.
   Limit: within 1.6 Nm
4. Make sure that the hub rotation starting torque is within the limit, and the hub turns smoothly.

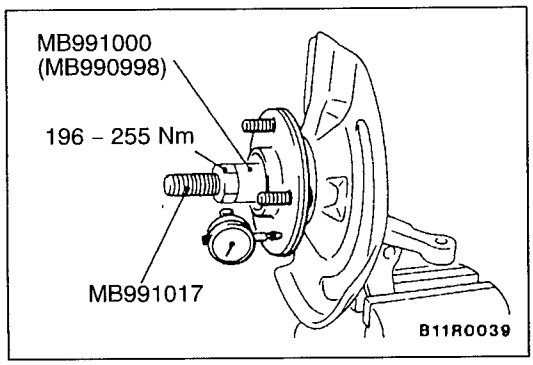

▶D◀ HUB AXIAL PLAY CHECK

1. Clamp the knuckle in a vise, and measure the hub axial play.
   Limit: 0.2 mm
2. If the limit value can not be obtained after tightening the special tool within 196 – 255 Nm, the wheel bearing, the knuckle and the hub may be improperly assembled. Disassemble these parts to replace the bearing, and then assemble them again.

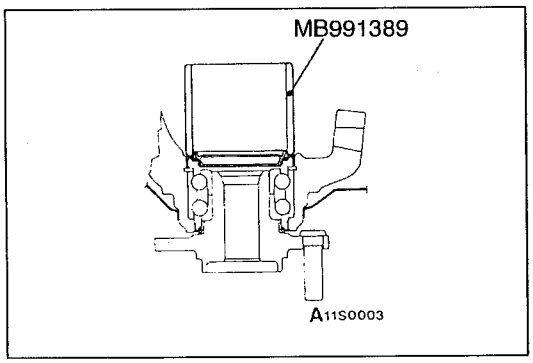

▶E◀ INNER OIL SEAL INSTALLATION

DRIVE SHAFT

REMOVAL AND INSTALLATION

Caution
On the vehicles with ABS, when the drive shaft is removed or installed, be careful not to interfere with the ABS rotor installed to the B.J. outer race to prevent the rotor from damage.

Pre-removal Operation
- Disengage the Stabilizer Link from the Strut Bar (Refer to GROUP 33 – Strut Bar and Lower Arm.)
- Brake Disc Removal (Refer to P.26-14.)

Post-installation Operation
- Press the Dust Cover with a Finger to Check Whether the Dust Cover is Cracked or Damaged.
- Engage the Stabilizer Link with the Strut Bar (Refer to GROUP 33 – Strut Bar and Lower Arm.)
- Brake Disc Installation (Refer to P.26-14.)

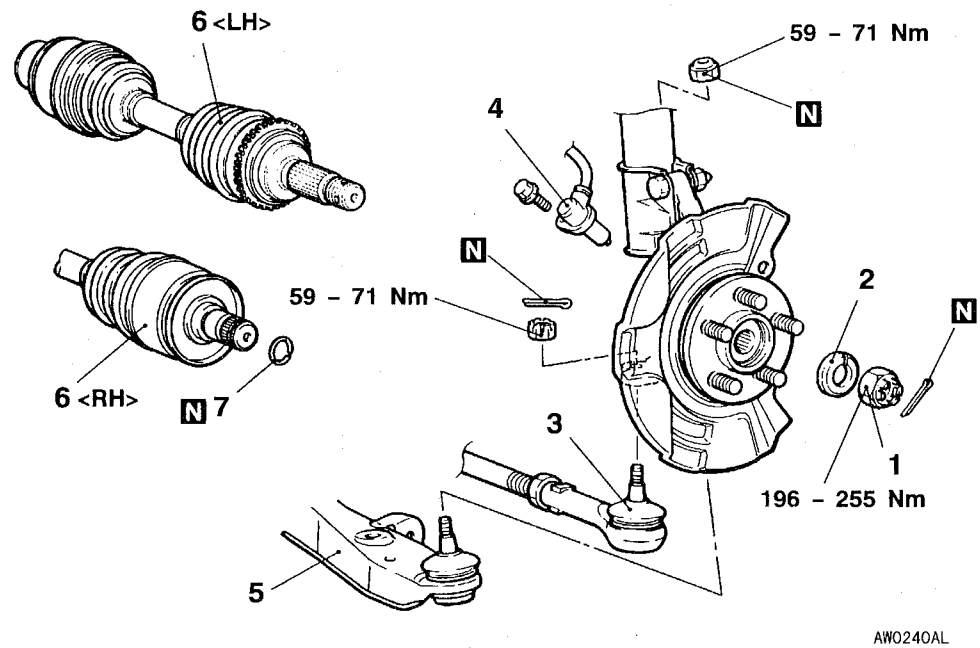

Removal steps

◀A▶ ▶A◀ 1. Castle nut
▶A◀ 2. Washer
◀B▶ 3. Tie rod end and hub/knuckle assembly connection
4. Wheel speed sensor
◀B▶ 5. Lower arm and hub/knuckle assembly connection
◀C▶ 6. Drive shaft
7. Circlip

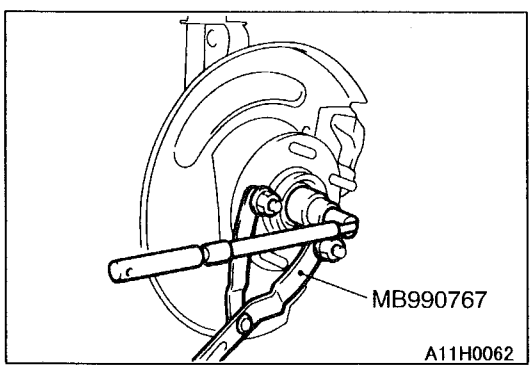

REMOVAL SERVICE POINTS

◀A▶ CASTLE NUT REMOVAL

Caution
Never apply the vehicle weight to the wheel bearing while the castle nut is loosened. If the vehicle weight is applied, the wheel bearing will be damaged.

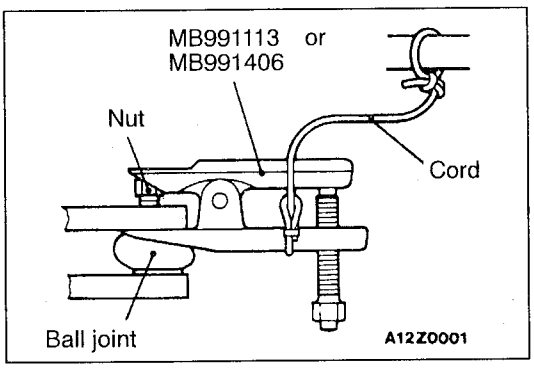

◀B▶ TIE ROD END AND HUB/KNUCKLE ASSEMBLY/LOWER ARM AND HUB/KNUCKLE ASSEMBLY DISCONNECTION

Caution
1. **Only loosen the ball joint nut, but do not remove it. Use the special tool.**
2. **Tie the special tool with a cord not to let it fall off.**

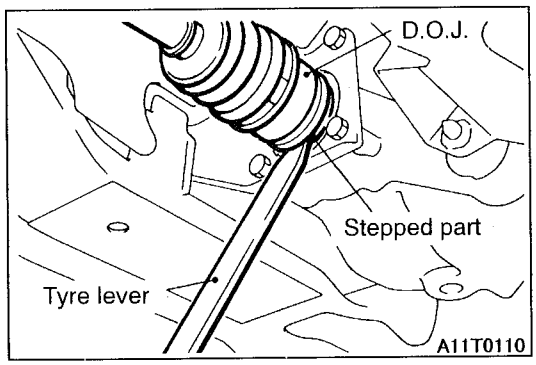

◀C▶ DRIVE SHAFT REMOVAL

1. For the left side drive shaft, pry the D.O.J. stepped part with a tyre lever, and then withdraw the drive shaft from the free-wheeling hub assembly.

   Caution
   Always use a tyre lever. When the drive shaft is withdrawn from the B.J. assembly, the D.O.J. may be damaged.

2. For the right side drive shaft, install the drive shaft with the castle nut loosely. Then pull the strut, the hub/knuckle assembly and the lower arm towards you, and then withdraw the drive shaft from the front differential.

   Caution
   Be sure to maintain the drive shaft horizontally not to bend the D.O.J. at extreme angle when the drive shaft is withdrawn.

3. If it is difficult to withdraw the drive shaft from the hub/knuckle assembly, use the special tools.

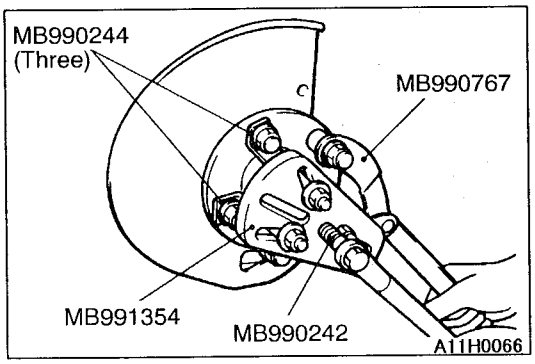

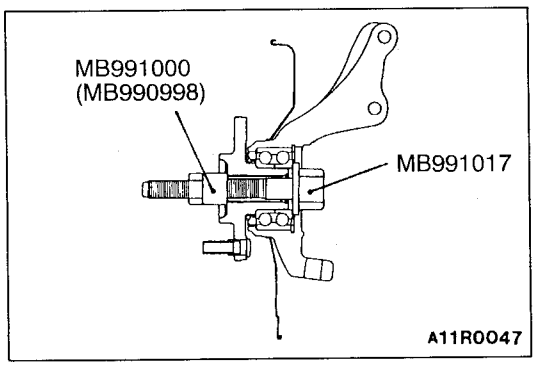

Caution
Do not apply the vehicle weight to the wheel bearing as possible while the drive shaft is removed. If it is impossible, use the special tool to hold the the wheel bearing as shown in the illustration.

INSTALLATION SERVICE POINT

▶A◀ WASHER, CASTLE NUT INSTALLATION

Refer to P. 26-15.

DISASSEMBLY AND REASSEMBLY

Caution
The B.J. assembly is non-serviceable and requires replacement if defective. B.J. boot can be replaced.

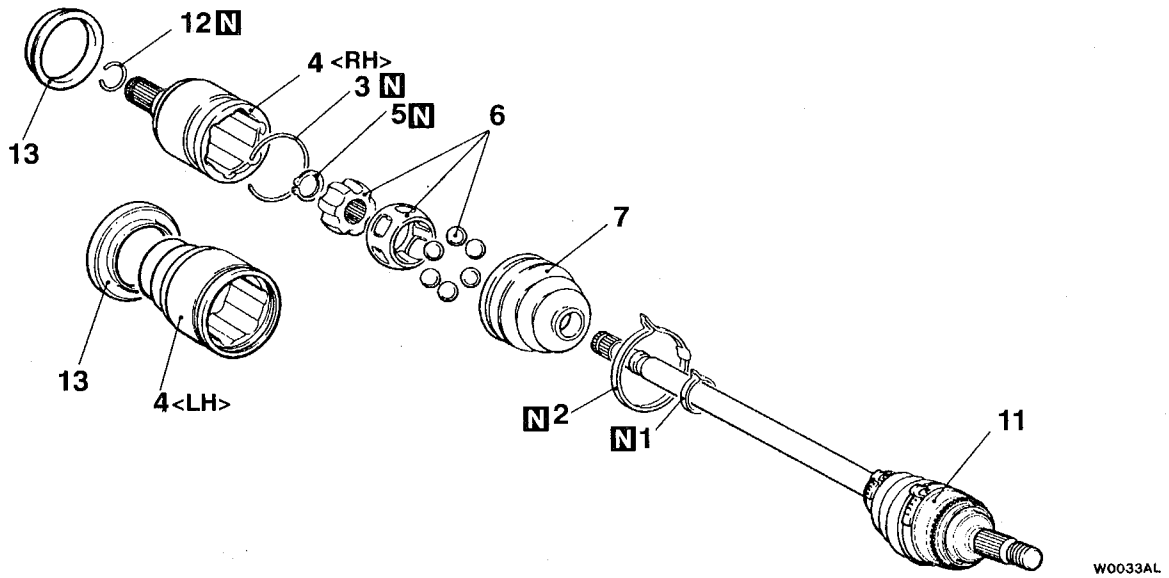

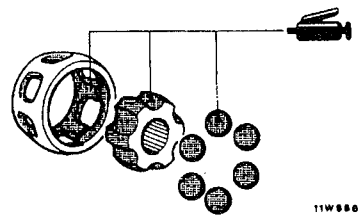	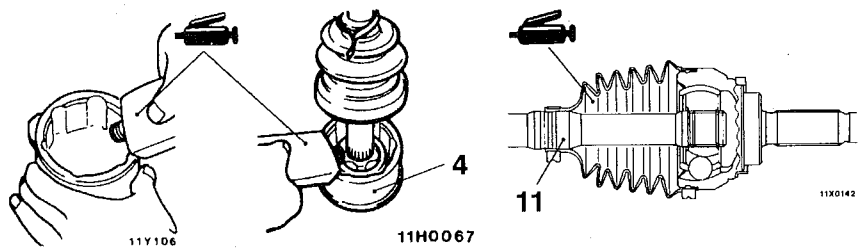
Grease: Repair kit grease	Grease: Repair kit grease Quantity: <4G1, 4G9-A/T> B.J.: 85 g (40 g for joint, 45 g for boot) D.O.J.: 85 g (50 g for joint, 35 g for boot) <4G9-M/T> B.J.: 110 g (55 g for joint, 55 g for boot) D.O.J.: 100 g (60 g for joint, 40 g for boot)

Caution
The joint is filled with a special grease. Do not mix the grease with an old one or other grease.

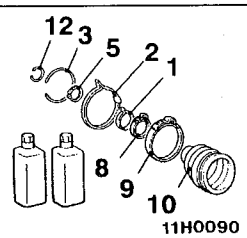	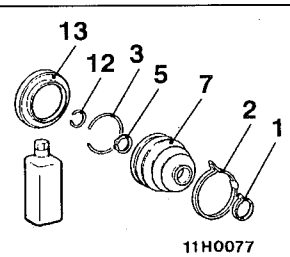	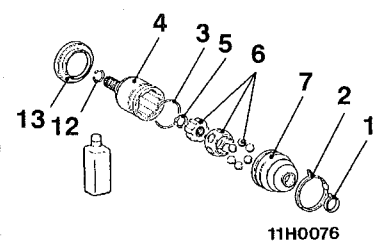
B.J. boot repair kit	D.O.J. boot repair kit	D.O.J. repair kit

00009003

Disassembly steps

▶B◀ 1. D.O.J. boot band (small)
▶B◀ 2. D.O.J. boot band (large)
3. Circlip
4. D.O.J. outer race
5. Snap ring
6. Inner race, cage, ball assembly
◀A▶ ▶A◀ 7. D.O.J. boot
8. B.J. boot band (small)
9. B.J. boot band (large)
10. B.J. boot
11. B.J. assembly
12. Circlip
13. Dust cover

DISASSEMBLY SERVICE POINTS

◀A▶ D.O.J. BOOT REMOVAL

Wrap a plastic tape around the B.J. assembly spline to prevent the boot from damage.

REASSEMBLY SERVICE POINTS

▶A◀ D.O.J. BOOT INSTALLATION

Wrap a plastic tape around the B.J. assembly spline to prevent damage, and then install the boot.

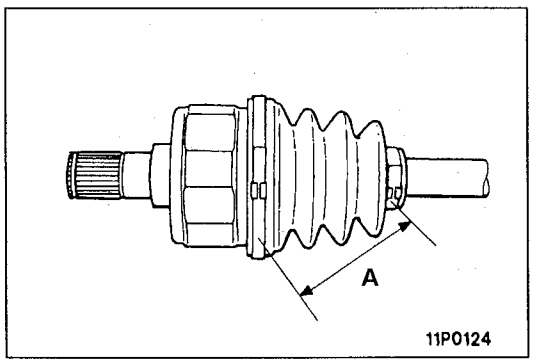

▶B◀ D.O.J. BOOT BAND/BOOT BAND INSTALLATION

1. Slide the D.O.J. outer race so that the distance between the boot bands meet the standard value in order to adjust the air amount inside the D.O.J. boot.
   Standard value (A): 80 ± 3 mm
2. Remove the boot partially from the D.O.J. outer race in order to bleed the air from the boot.

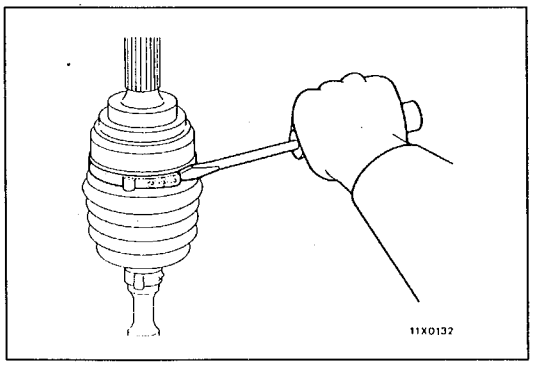

B.J. BOOT (PLASTIC BOOT) REPLACEMENT

1. Remove the boot bands (small and large).
   NOTE
   The boot bands are non-reusable parts.
2. Remove the plastic boot.

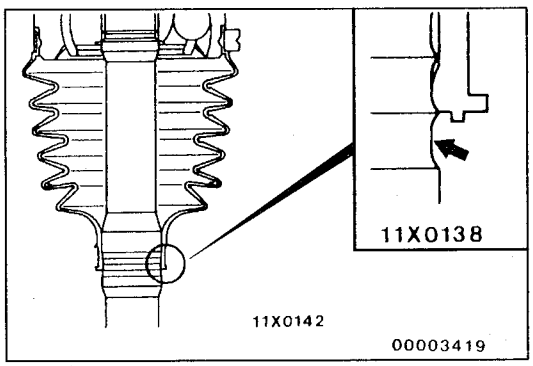

3. Position the plastic boot small end so that one drive shaft groove is visible.

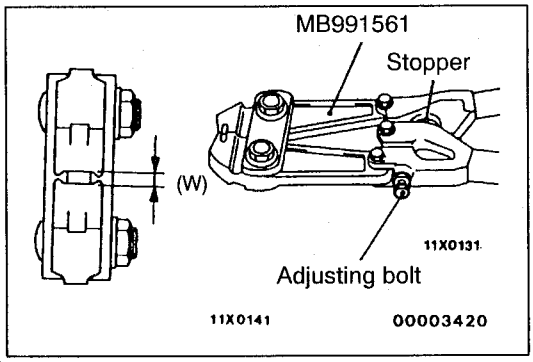

4. Turn the adjusting bolt of the special tool so that the opening distance (W) meets the standard value.
   Standard value (W): 2.9 mm
   <More than 2.9 mm>
   Tighten the adjusting bolt.
   <Less than 2.9 mm>
   Loosen the adjusting bolt
   NOTE
   (1) Turning the adjusting bolt changes the opening distance (W) by approx. 0.7 mm.
   (2) Do not turn the adjusting bolt more than one turn.

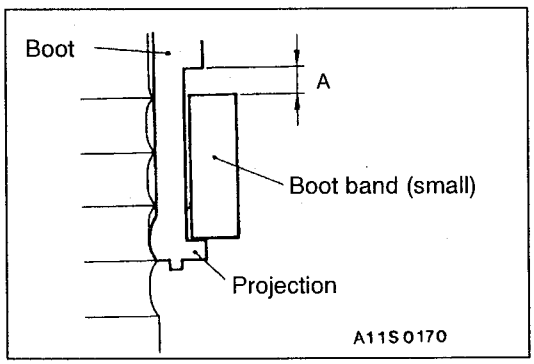

5. Butt the boot band (small) against the boot end projection so that a certain clearance (A) is obtained.

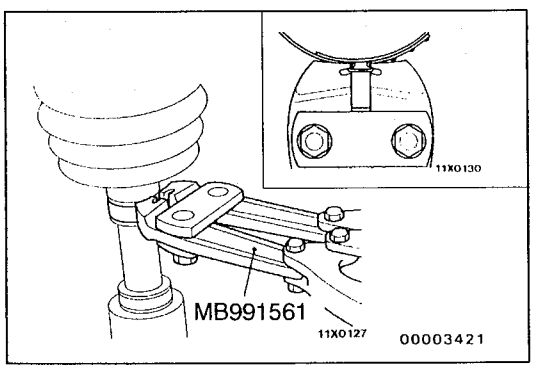

6. Use the special tool to crimp the boot band (small).
   Caution
   (1) Secure the drive shaft in an upright position and clamp the part of the B.J. boot band to be crimped securely in the jaws of the special tool.
   (2) Crimp the B.J. boot band until the special tool stopper closes.

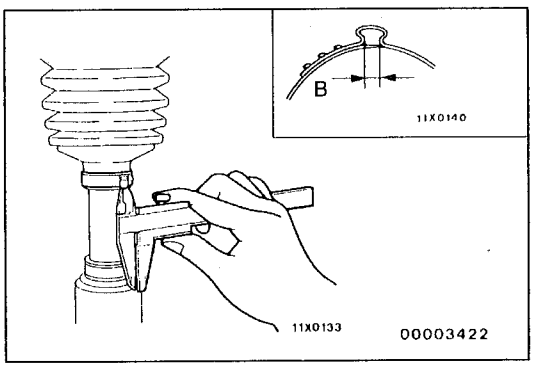

7. Check that the crimping amount (B) of the B.J. boot band is at the standard value.

   Standard value (B): 2.4 – 2.8 mm

   <If the crimping amount is larger than 2.8 mm>
   Readjust the value of (W) in step 4 according to the following formula, and then repeat the operation in step 6.
   W = 5.5 mm – B
   Example: If B = 2.9 mm, then W = 2.6 mm.

   <If the crimping amount is smaller than 2.4 mm>
   Remove the B.J. boot band, readjust the value of (W) in step 4 according to the following formula, and then repeat the operations in steps 5 and 6 using a new B.J. boot band.
   W = 5.5 mm – B
   Example: If B = 2.3 mm, then W = 3.2 mm.

8. Check that the B.J. boot band is not sticking out past the place where it has been installed.
   If the B.J. boot band is sticking out, remove it and then repeat the operations in steps 4 to 7 using a new B.J. boot band.

9. Fill the inside of the B.J. boot with the specified amount of the specified grease.

   Specified grease: Repair kit grease

   Amount to use:
   <4G1, 4G9-A/T> 85 g (50 g for joint, 35 g for boot)
   <4G9-M/T> 110 g (55 g for joint, 55g for boot)

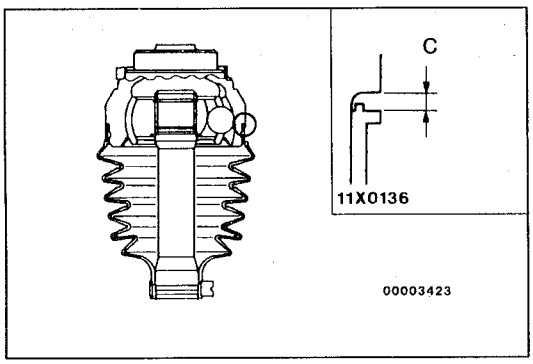

10. Position the boot so that the difference between the boot big end and the housing stepped part (C) meets the standard value.

    Standard value (C) : 0.1 – 1.55 mm

11. Follow the same procedure as in step 4 to adjust the size of the opening (W) on the special tool so that it is at the standard value.

    Standard value (W): 3.2 mm

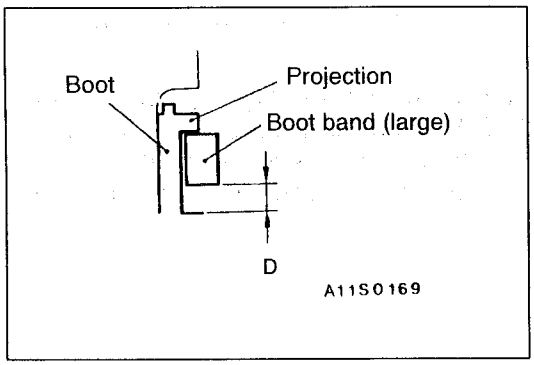

12. Place the B.J. boot band (large) against the projection at the edge of the boot, and then secure it so that there is a clearance left as shown by (D) in the illustration.
13. Use the special tool to crimp the B.J. boot band (large) in the same way as in step 6.

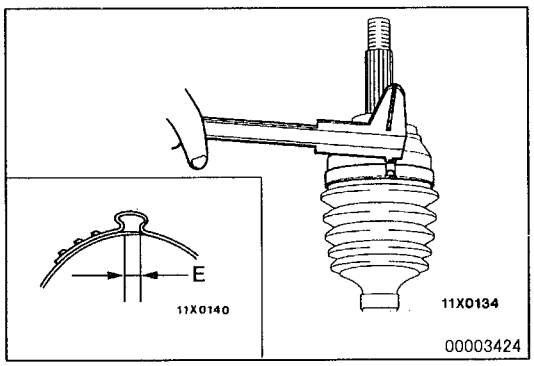

14. Check that the crimping amount (E) of the B.J. boot band is at the standard value.

    Standard value (E): 2.4 – 2.8 mm

    <If the crimping amount is larger than 2.8 mm>
    Readjust the value of (W) in step 11 according to the following formula, and then repeat the operation in step 13.
    W = 5.8 mm – E
    Example: If E = 2.9 mm, then W = 2.9 mm.

    <If the crimping amount is smaller than 2.4 mm>
    Remove the B.J. boot band, readjust the value of (W) in step 11 according to the following formula, and then repeat the operations in steps 12 and 13 using a new B.J. boot band.
    W = 5.8 mm – E
    Example: If E = 2.3 mm, then W = 3.5 mm.

15. Check that the B.J. boot band is not sticking out past the place where it has been installed.
    If the B.J. boot band is sticking out, remove it and then repeat the operations in steps 12 to 14 using a new B.J. boot band.

MAIN SHAFT

REMOVAL AND INSTALLATION

Pre-removal and Post-installation Operation
- Drive Shaft Removal and Installation (Refer to P.26-19.)
- Free-wheeling Clutch Housing Assembly Removal and Installation (Refer to P.26-45.)
- Gear Oil Draining and Refilling (Refer to P.26-11.)

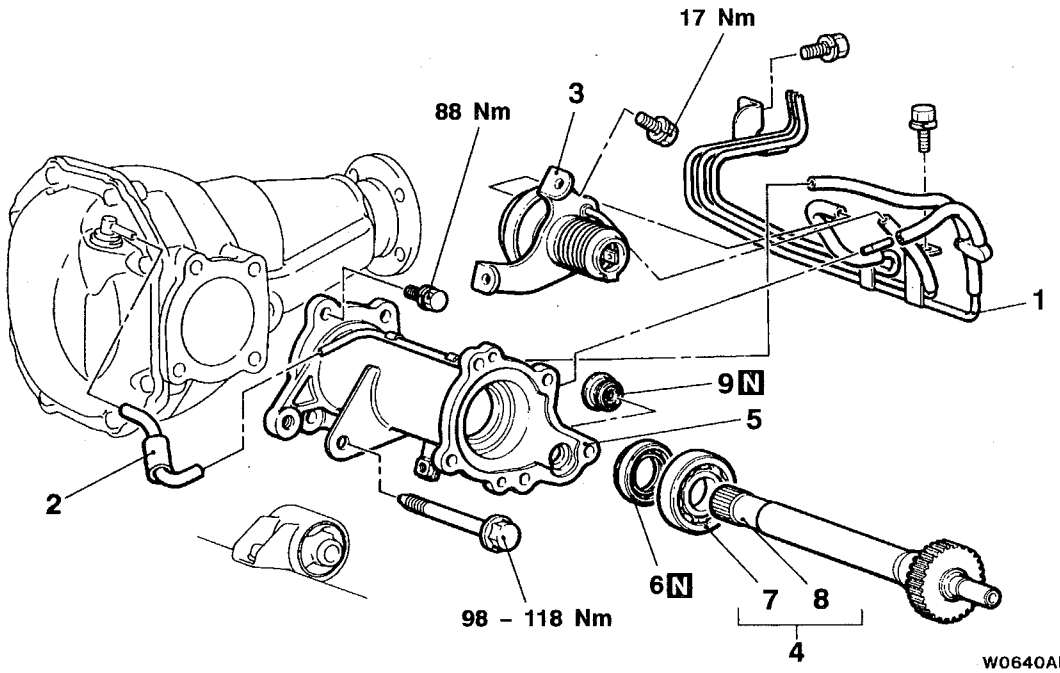

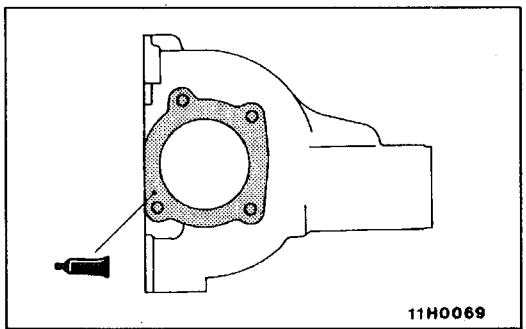

Sealant:
3M ATD Part No.8663 or equivalent

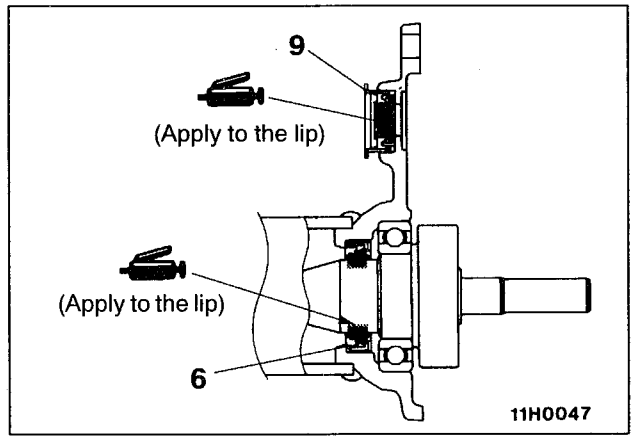

00009004

Removal steps

1. Vacuum pipe assembly
2. Vacuum hose assembly
3. Vacuum actuator assembly
4. Inner shaft assembly
5. Front housing assembly
- ▶C◀ 6. Oil seal
- ◀A▶ ▶B◀ 7. Bearing
- 8. Main shaft
- ▶A◀ 9. Oil seal

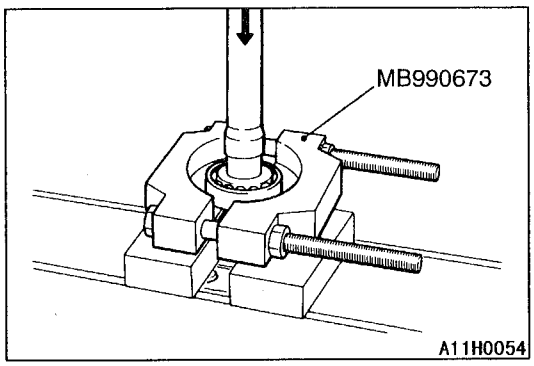

REMOVAL SERVICE POINT

◀A▶ BEARING REMOVAL

Install the special tool as shown in the illustration, and use a press to drive out the bearing from the main shaft.

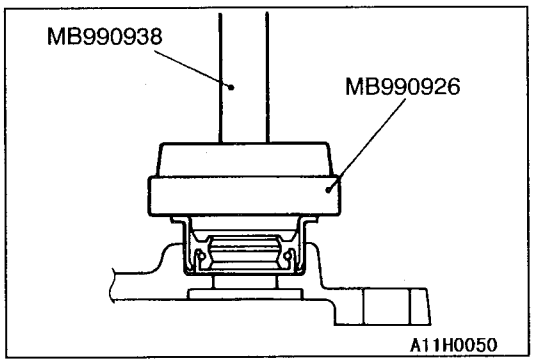

INSTALLATION SERVICE POINTS

▶A◀ OIL SEAL INSTALLATION

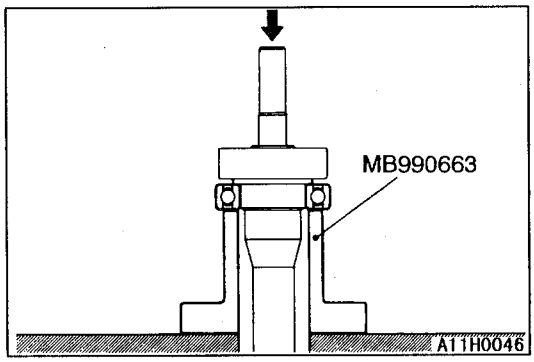

▶B◀ BEARING INSTALLATION

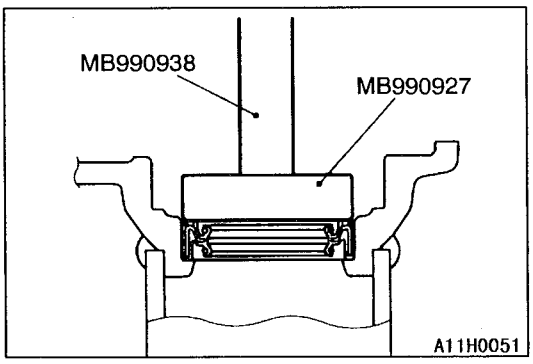

▶C◀ OIL SEAL INSTALLATION

DIFFERENTIAL CARRIER

REMOVAL AND INSTALLATION

Caution
To prevent bushings from breakage, the parts indicated by * should be temporarily tightened, and then fully tightened with the vehicle on the ground in the unladen condition.

Pre-removal and Post-installation Operation
- Drive Shaft Removal and Installation (Refer to P.26-19.)
- Stabilizer Bar Removal and Installation (Refer to GROUP 33A.)
- Gear Oil Draining and Refilling (Refer to 26-11.)

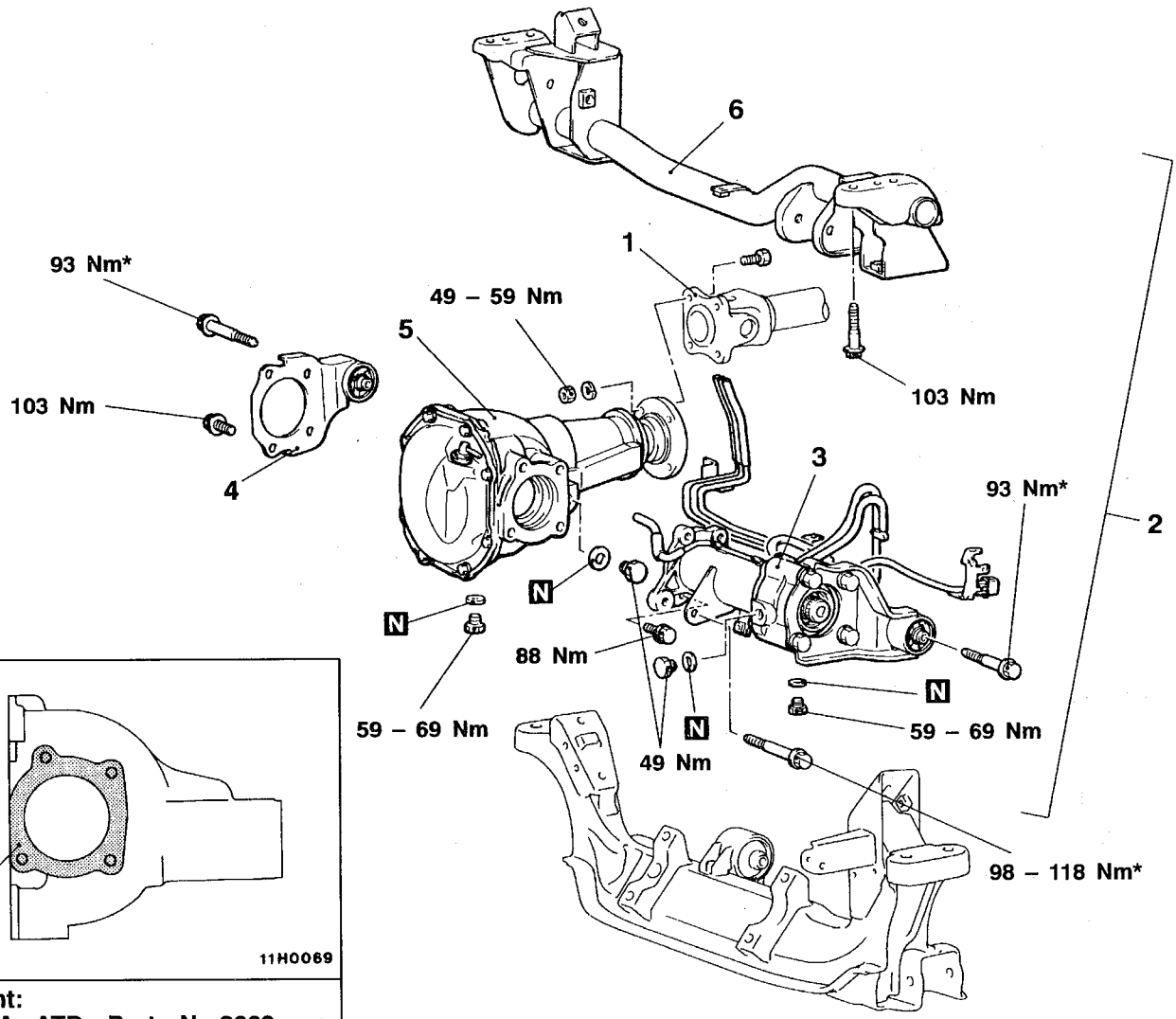

Sealant:
3M ATD Part No.8663 or equivalent

Removal steps

◀A▶
- Support the Engine Assembly

1. Front propeller shaft connection
2. Front differential assembly and differential mount crossmember assembly
3. Free-wheeling clutch assembly
4. Differential mount bracket assembly <RH>
5. Differential carrier
6. Differential mount crossmember assembly

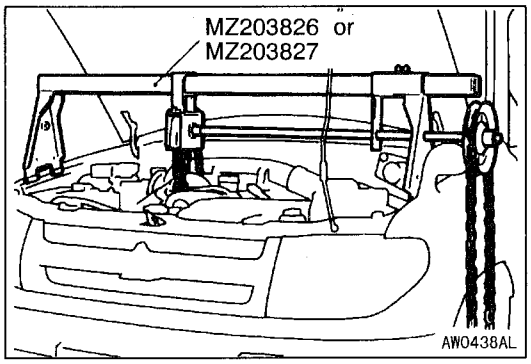

REMOVAL SERVICE POINT

◀A▶ ENGINE ASSEMBLY SUPPORT

Use the special tool to raise the engine assembly until the mount insulators are free from load.

DISASSEMBLY

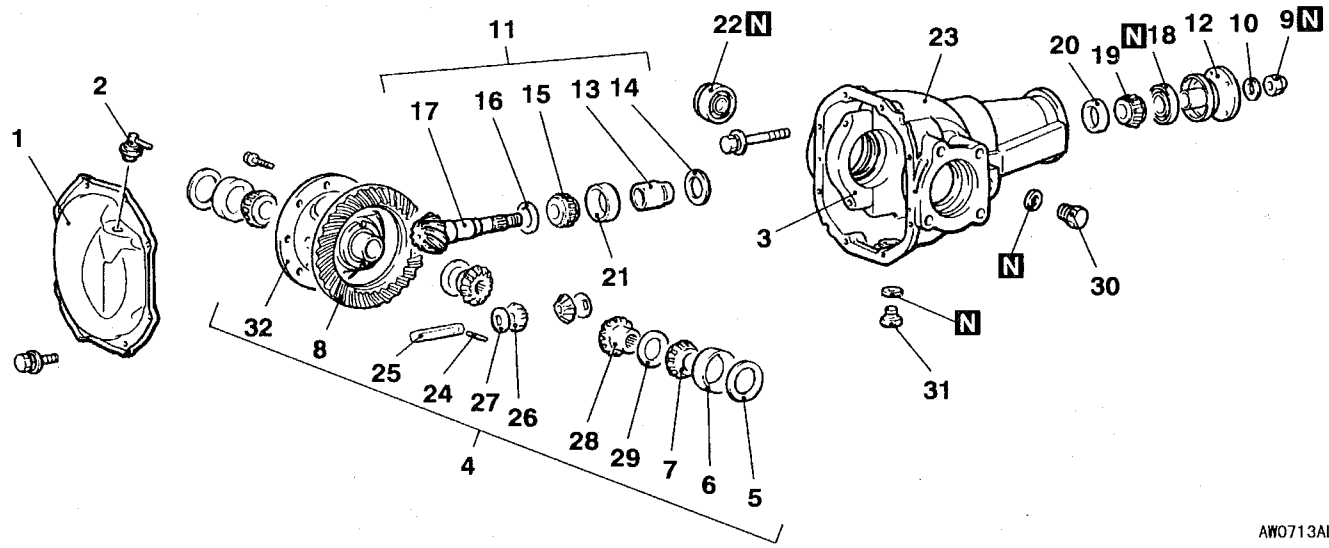

Disassembly steps

- Inspection before disassembly
1. Cover
2. Vent plug
3. Bearing cap
◀A▶ 4. Differential case assembly
5. Side bearing spacer
6. Side bearing outer race
◀B▶ 7. Side bearing inner race
◀C▶ 8. Drive gear
◀D▶ 9. Self-locking nut
10. Washer
◀E▶ 11. Drive pinion assembly
12. Companion flange
13. Drive pinion spacer
14. Drive pinion rear shim (For drive pinion rotation torque adjustment)
◀F▶ 15. Drive pinion front bearing inner race
16. Drive pinion front shim (For drive pinion height adjustment)
17. Drive pinion
◀G▶ 18. Oil seal
◀G▶ 19. Drive pinion rear bearing inner race
◀G▶ 20. Drive pinion rear bearing outer race
◀H▶ 21. Drive pinion front bearing outer race
22. Oil seal
23. Differential carrier
◀I▶ 24. Lock pin
25. Pinion shaft
26. Pinion gear
27. Pinon washer
28. Side gear
29. Side gear spacer
30. Filler plug
31. Drain plug
32. Differential case

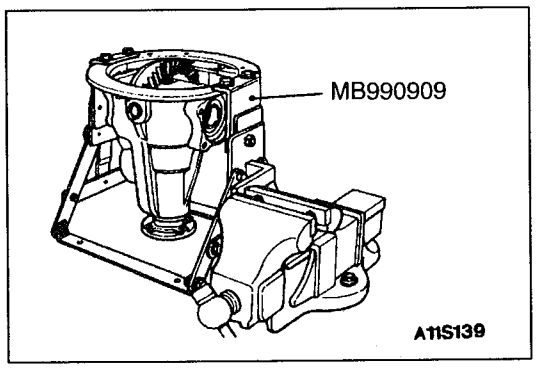

INSPECTION BEFORE DISASSEMBLY

1. Remove the cover.
2. Hold the special tool in a vise, and install the differential carrier assembly to the special tool.

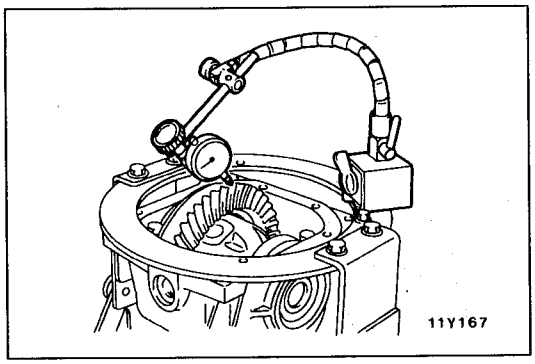

DRIVE GEAR BACKLASH

1. With the drive pinion locked in place, use a dial gauge to measure the drive gear backlash in four or more places on the drive gear.

   Standard value: 0.11 – 0.16 mm

2. If the backlash is not within the standard value, adjust the backlash of the final drive gear (Refer to P.26-42).
3. After adjustment, inspect the drive gear tooth contact.

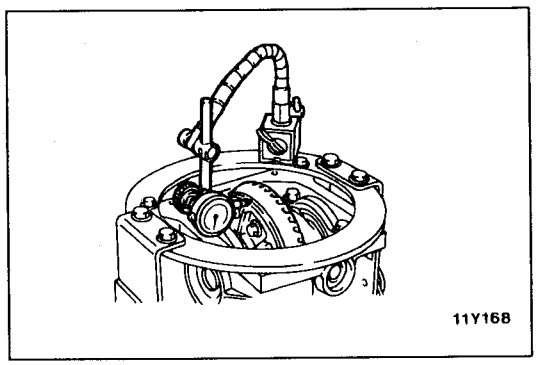

DRIVE GEAR RUNOUT

1. Measure the drive gear runout at the shoulder on the reverse side of the drive gear.

   Limit: 0.05 mm

2. When runout exceeds the limit value, check for foreign object between drive gear rear side and differential case, or for loose drive gear installation bolts.
3. When check (2) gives normal results, reposition drive gear and differential case and remeasure.
4. If adjustment is impossible, replace differential case, or replace drive gear and pinion as a set.

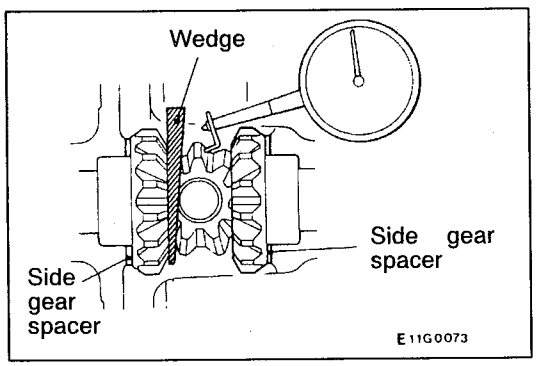

DIFFERENTIAL GEAR BACKLASH

1. While locking the side gear with the wedge, measure the differential gear backlash with a dial indicator on the pinion gear.

   Standard value: 0 – 0.076 mm
   Limit: 0.2 mm

   Repeat the same procedure for other pinion gear.
2. If the backlash exceeds the limit, adjust the differential gear backlash (Refer to P.26-41).
3. If adjustment is impossible, replace the side gear and pinion gear as a set.

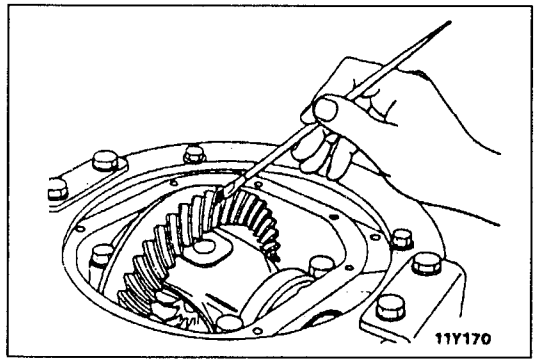

DRIVE GEAR TOOTH CONTACT

Check the tooth contact of drive gear by following the steps below.

1. Apply a thin, uniform coat of machine blue to both surfaces of the drive gear teeth.

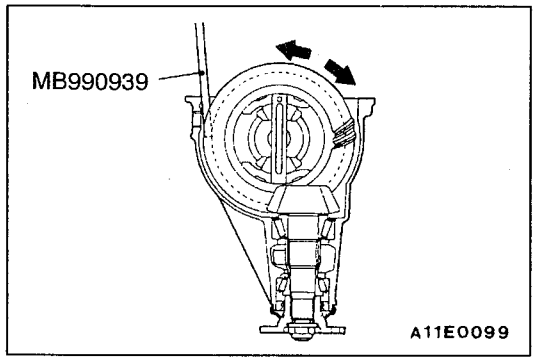

2. Insert the special tool between the differential carrier and the differential case, and then rotate the companion flange by hand (once in the normal direction, and then once in the reverse direction) while applying a load to the drive gear so that the revolution torque (approximately 2.5 – 2.9 Nm) is applied to the drive pinion.

   Caution
   If the drive gear is rotated too much, the tooth contact pattern will become unclear and difficult to check.

3. Check the tooth contact condition of the drive gear and drive pinion.

<table>
<tr><th>Standard tooth contact pattern</th><th>Problem</th><th>Solution</th></tr>
<tr><td rowspan="2">1 Narrow tooth side
2 Drive-side tooth surface (the side applying power during forward movement)
3 Wide tooth side
4 Coast-side tooth surface (the side applying power during reverse movement)

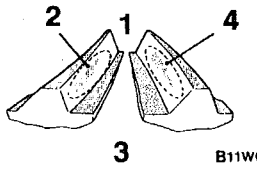

B11W0115</td><td>Tooth contact pattern resulting from excessive pinion height

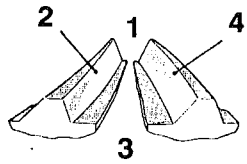

B11W0116

The drive pinion is positioned too far from the centre of the drive gear.</td><td>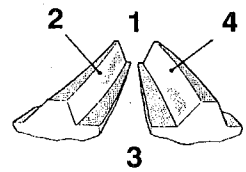

B11W0118

Increase the thickness of the drive pinion rear shim, and position the drive pinion closer to the centre of the drive gear. Also, for backlash adjustment, position the drive gear farther from the drive pinion.</td></tr>
<tr><td>Tooth contact pattern resulting from insufficient pinion height.

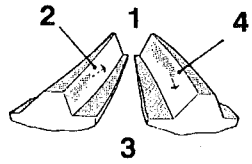

B11W0117

The drive pinion is positioned too close to the centre of the drive gear.</td><td>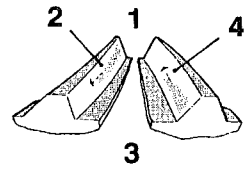

B11W0119

Decrease the thickness of the drive pinion rear shim, and position the drive pinion farther from the centre of the drive gear. Also, for backlash adjustment, position the drive gear closer to the drive pinion.</td></tr>
</table>

NOTE

Checking the tooth contact pattern is the way to confirm that the adjustments of the pinion height and backlash have been done properly. Continue to adjust the pinion height and backlash until the tooth contact pattern resembles the standard pattern.

If, even after adjustments have been made, the correct tooth contact pattern cannot be obtained, it means that the drive gear and the drive pinion have become worn beyond the allowable limit. Replace the gear set.

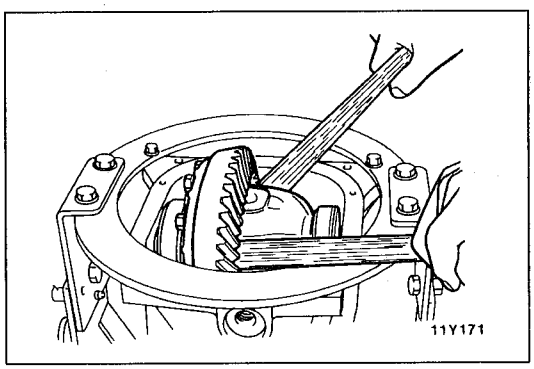

DISASSEMBLY SERVICE POINTS

◀A▶ DIFFERENTIAL CASE ASSEMBLY REMOVAL

Remove the differential case assembly with a hammer handle or the like.

Caution

When taking out the differential case assembly, be careful not to drop and damage the side bearing outer races.

NOTE

Keep the right and left side bearing outer races and side bearing spacers separate, so that they do not become mixed at the time of reassembly.

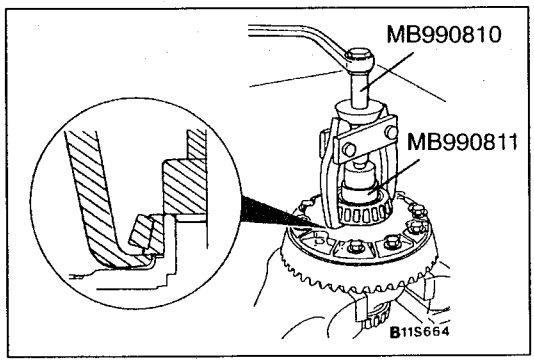

◀B▶ SIDE BEARING INNER RACE REMOVAL

NOTE

There are two notches provided (at the differential case side) for the jaws of the special tool; use the special tool at that position.

If the special tool jaws cannot be inserted between the differential case and the bearing inner race, file the jaw tips as necessary.

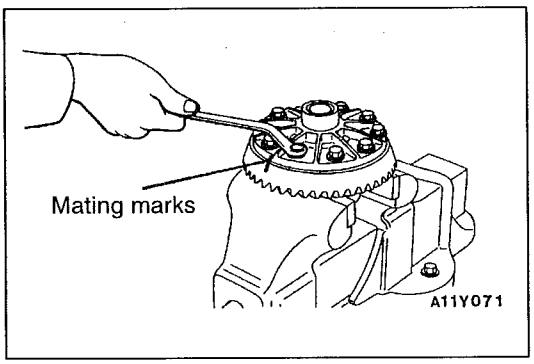

◀C▶ DRIVE GEAR REMOVAL

1. Make the mating marks on the differential case and the drive gear.
2. Loosen the drive gear attaching bolts in diagonal sequence to remove the drive gear.

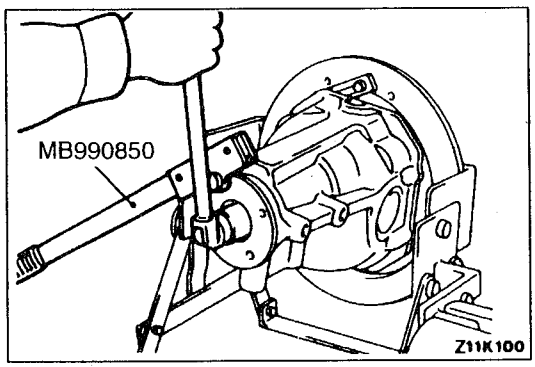

◀D▶ SELF-LOCKING NUT REMOVAL

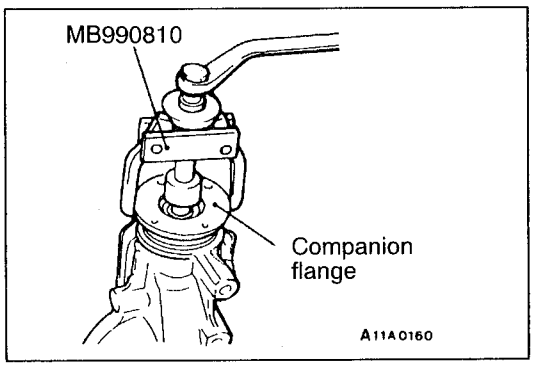

◀E▶ DRIVE PINION ASSEMBLY REMOVAL

1. Make mating marks on the drive pinion and the companion flange.

   Caution
   The mating mark must not be on the coupling surface of the companion flange and the front propeller shaft.

2. Use the special tool to drive out the drive pinion.

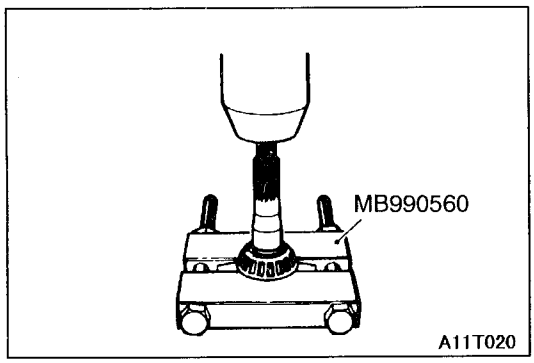

◀F▶ DRIVE PINION FRONT BEARING INNER RACE REMOVAL

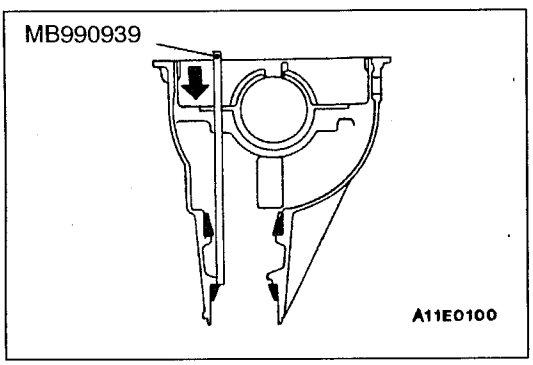

◀G▶ OIL SEAL/DRIVE PINION REAR BEARING INNER RACE/DRIVE PINION REAR BEARING OUTER RACE REMOVAL

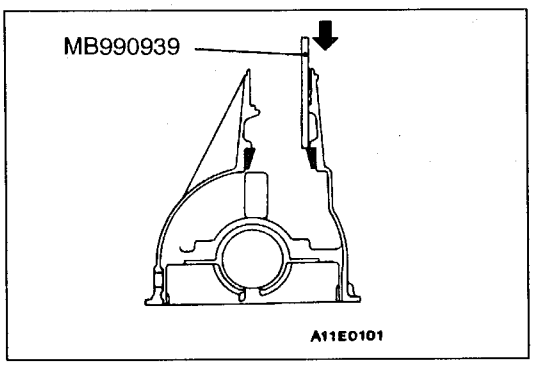

◀H▶ DRIVE PINION FRONT BEARING OUTER RACE REMOVAL

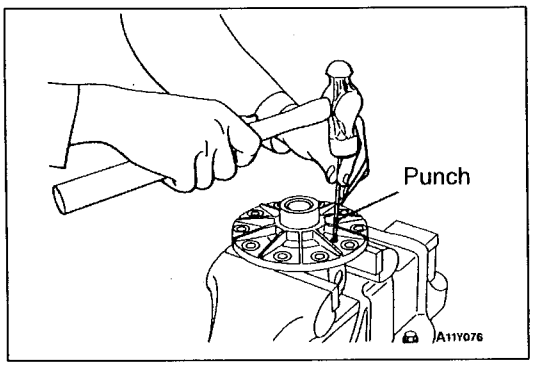

◀I▶ LOCK PIN DRIVE OUT

REASSEMBLY

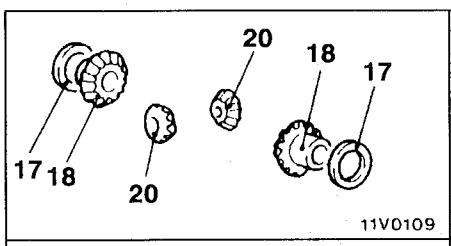

Differential gear set

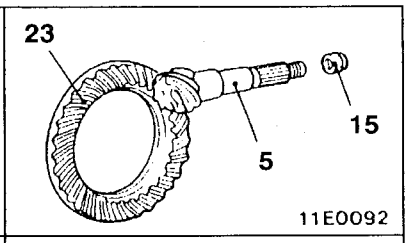

Final drive gear set

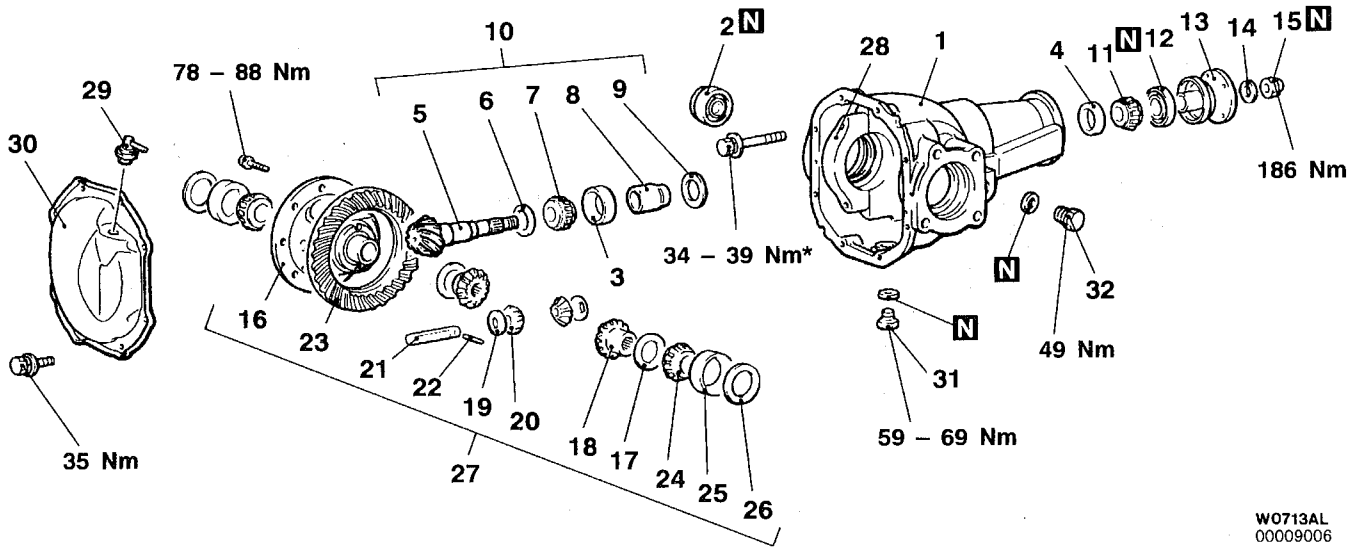

Reassembly steps

1. Differential carrier
- ▶A◀ 2. Oil seal
- ▶B◀ 3. Drive pinion front bearing outer race
- ▶C◀ 4. Drive pinion rear bearing outer race
- ▶D◀ • Drive pinion height adjustment
5. Drive pinion
6. Drive pinion front shim (for drive pinion height adjustment)
7. Drive pinion front bearing inner race
8. Drive pinion spacer
- ▶E◀ • Drive pinion rotation torque adjustment
9. Drive pinion rear shim (for drive pinion rotation torque adjustment)
10. Drive pinion assembly
11. Drive pinion rear bearing inner race
12. Oil seal
13. Companion flange
14. Washer
15. Self-locking nut
16. Differential case
- ▶F◀ • Differential gear backlash adjustment
17. Side gear spacer
18. Side gear
19. Pinion washer
20. Pinion gear
21. Pinion shaft
- ▶G◀ 22. Lock pin
- ▶H◀ 23. Drive gear
- ▶I◀ 24. Side bearing inner race
25. Side bearing outer race
- ▶J◀ • Final drive gear backlash adjustment
26. Side bearing spacer
27. Differential case assembly
28. Bearing cap
29. Vent plug
30. Cover
31. Drain plug
32. Filler plug

NOTE
The fasteners marked by * should be tightened when the differential gear oil is applied.

LUBRICATION, SEALANT AND ADHESIVE POINTS

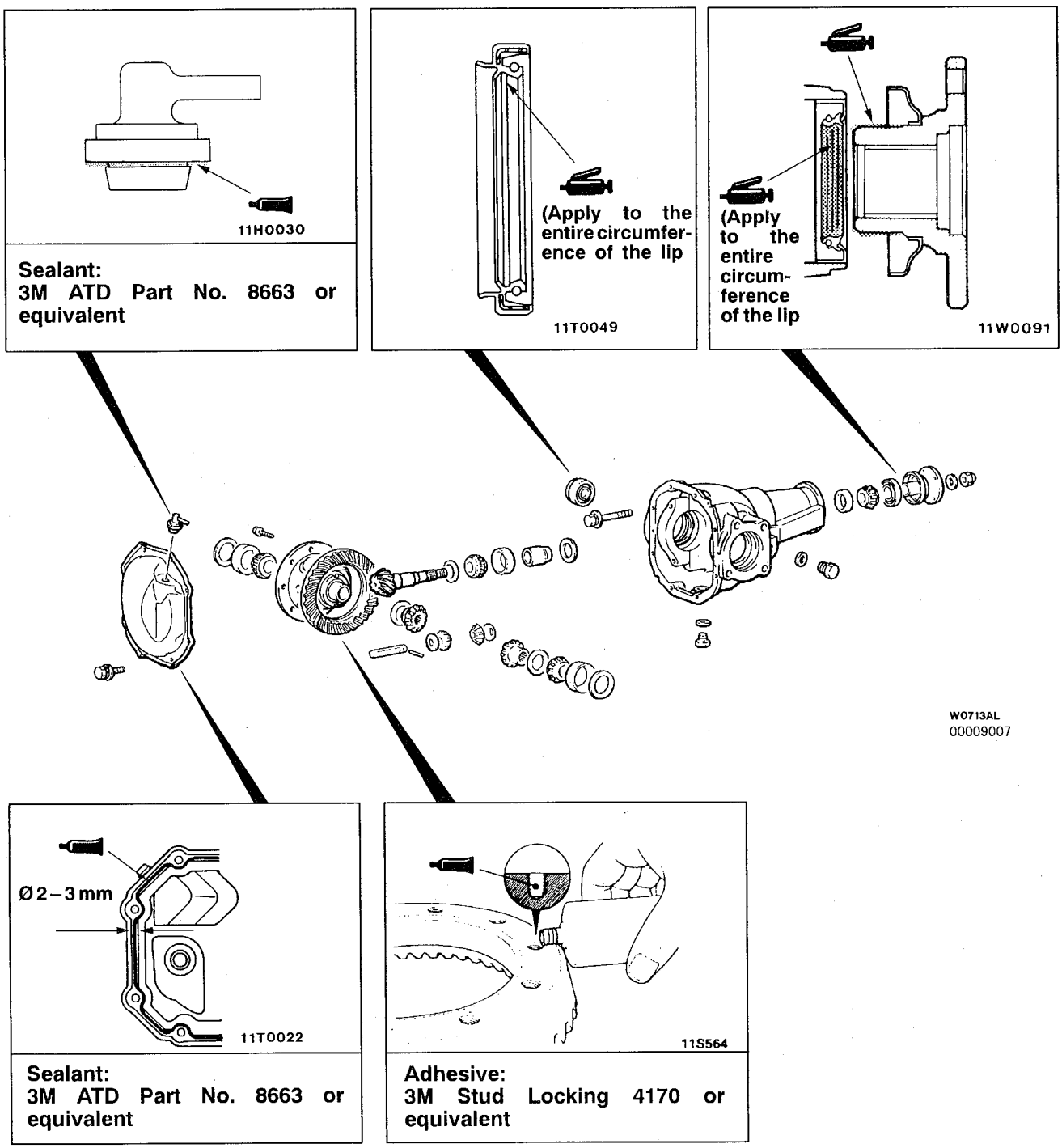

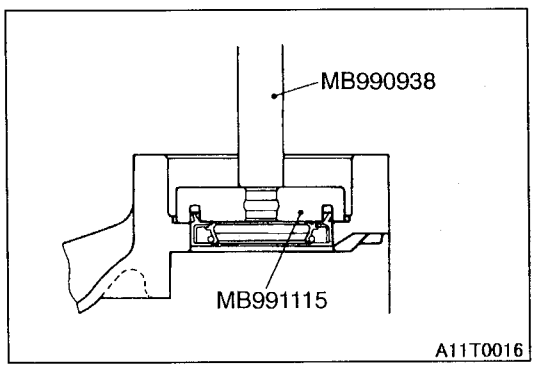

REASSEMBLY SERVICE POINTS

▶A◀ OIL SEAL INSTALLATION

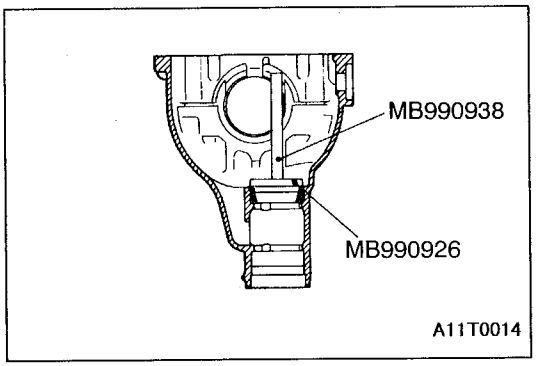

▶B◀ DRIVE PINION FRONT BEARING OUTER RACE INSTALLATION

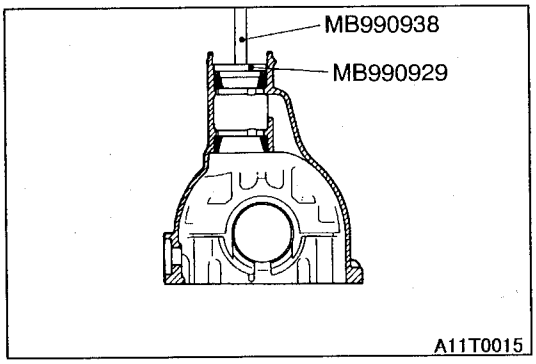

▶C◀ DRIVE PINION REAR BEARING OUTER RACE INSTALLATION

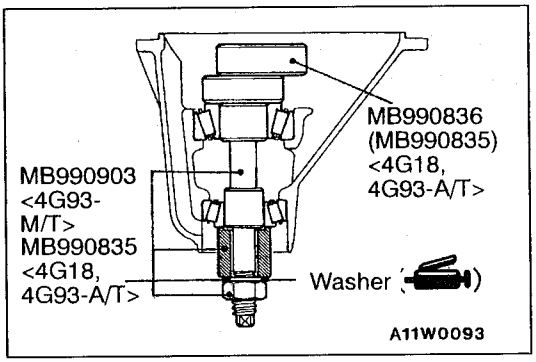

▶D◀ DRIVE PINION HEIGHT ADJUSTMENT

Adjust the drive pinion height by the following procedure.

1. Apply multipurpose grease to the washer of the special tool.
2. Install the special tool, drive pinion front and rear bearing inner races to the gear carrier.

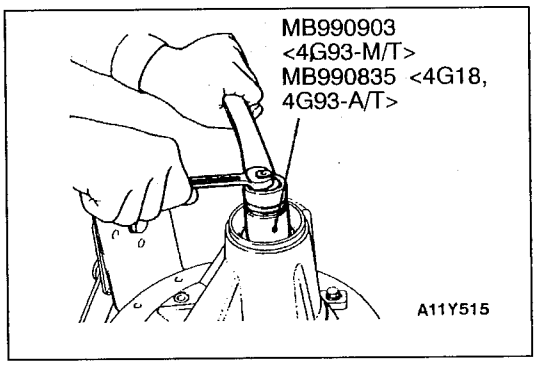

3. Tighten the nut of the special tool while measuring the rotation torque of the drive pinion. Gradually keep tightening the nut of the special tool until the rotation torque of the drive pinion (without oil seal) is at the standard value.

Standard value:

Bearing division	Bearing lubrication	Rotation torque Nm
New	None (With anti-rust agent)	0.88 – 1.17*1 0.29 – 0.49*2
New or reused	Gear oil applied	0.39 – 0.49*1 0.147 – 0.245*2

NOTE
*1: 4G9-M/T
*2: 4G1, 4G9-A/T

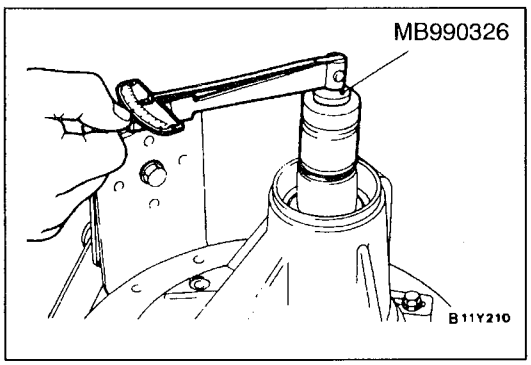

NOTE
The special tool cannot be turned a full revolution, so turn it several times within the range of movement to run in the bearing, and then measure the rotation torque.

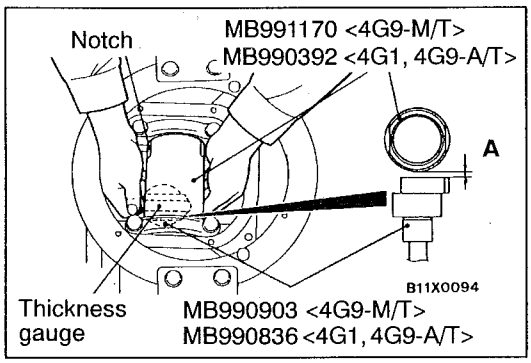

4. Clean the side bearing hub.
5. Install the special tools to the side bearing hub of the gear carrier, and then install the bearing cap.

NOTE
Always check that the notch is in the shown position and that the special tools are touching firmly against the side bearing hub.

6. Use a thickness gauge to measure the clearance (A) between the special tools.

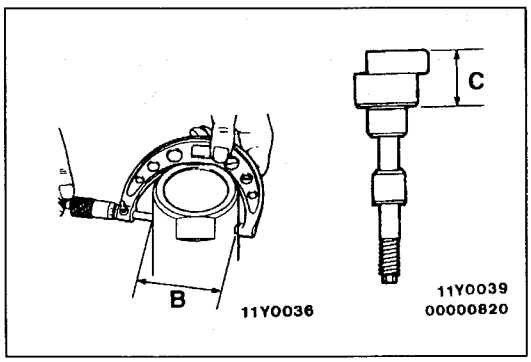

7. Remove the special tools.
8. Use a micrometer to measure the special tool in the places (B, C) shown in the illustration.

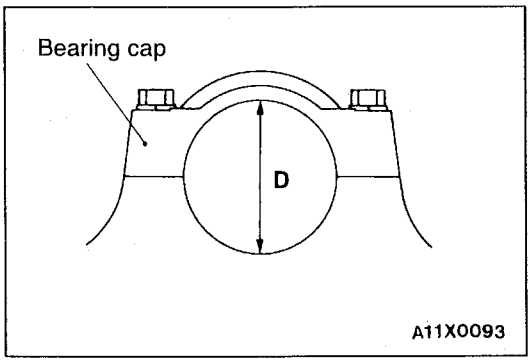

9. Install the bearing cap, and then use a cylinder gauge and micrometer to measure the inside diameter (D) of the bearing cap as shown in the illustration.
10. Calculate the thickness (E) of the required drive pinion front shim by the following formula, and then select a shim which most closely matches this thickness.
E = A + B + C–1/2D–86.0

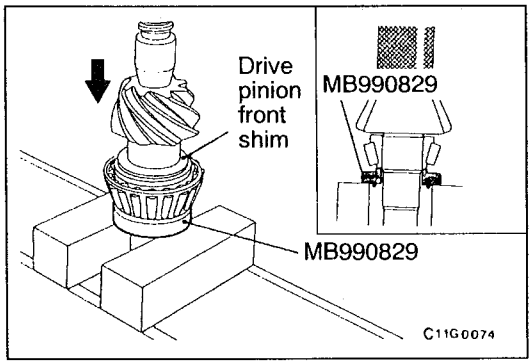

11. Fit the selected drive pinion front shim(s) to the drive pinion, and press-fit the drive pinion front bearing inner race by using the special tool.

▶E◀ DRIVE PINION ROTATION TORQUE ADJUSTMENT

Adjust the drive pinion rotation torque by using the following procedure:

1. Insert the drive pinion into the gear carrier, and then install the drive pinion spacer, the drive pinion rear shim, the drive pinion rear bearing inner race, and the companion flange in that order.

   NOTE
   Do not install the oil seal.

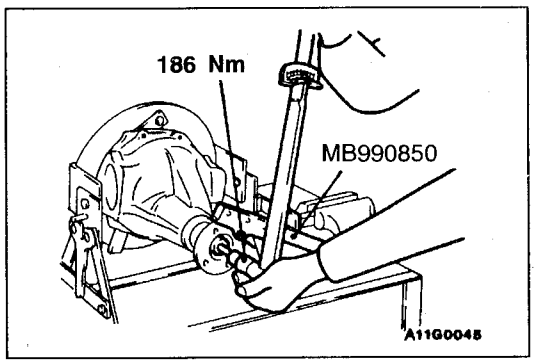

2. Use the special tool to hold companion flange, and then tighten the self-locking nut to the specified torque.

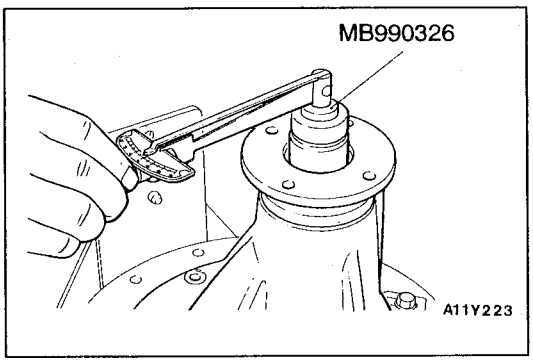

3. Measure the drive pinion rotation torque (without the oil seal) by using the special tool.

   Standard value:

Bearing division	Bearing lubrication	Rotation torque Nm
New	None (With anti-rust agent)	0.88 – 1.17*1 0.29 – 0.49*2
New/reused	Gear oil applied	0.39 – 0.49*1 0.147 – 0.245*2

NOTE
*1: 4G9-M/T
*2: 4G1, 4G9-A/T

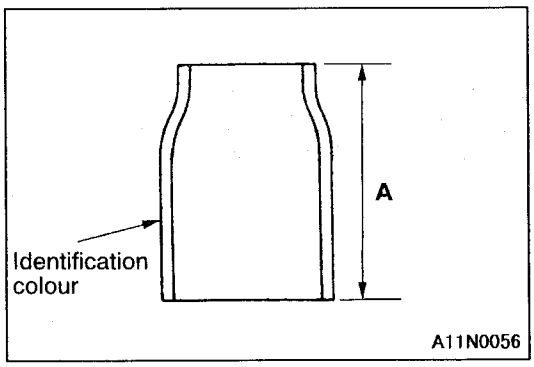

4. If the drive pinion rotation torque is not within the range of the standard value, adjust it by replacing the drive pinion rear shim(s) or the drive pinion spacer.

   NOTE
   When selecting the drive pinion rear shims, if the number of shims is large, reduce the number of shims to a minimum by selecting the drive pinion spacers. Also, select the drive pinion spacer from the following two types.

Drive pinion spacer height (A) mm	Identification colour
46.67*1	White
47.01*1	–
57.72*2	–
57.08*2	Red

NOTE
*1: 4G9-M/T
*2: 4G1, 4G9-A/T

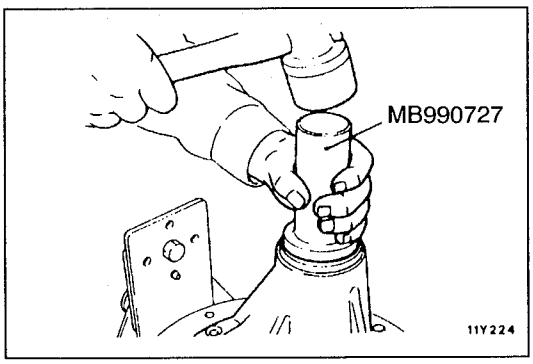

5. Remove the companion flange and drive pinion again. Then, after inserting the drive pinion rear bearing inner race into the gear carrier, use the special tool to press-fit the oil seal.

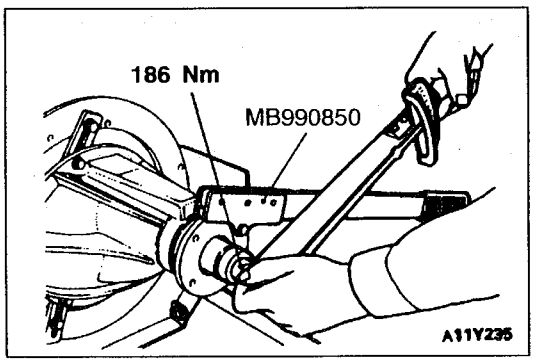

6. Install the drive pinion assembly and companion flange with mating marks properly aligned, and use the special tool to hold the companion flange, and then tighten the self-locking nut to the specified torque.

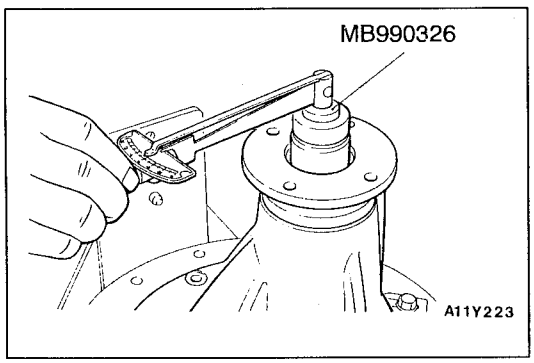

7. Measure the drive pinion rotation torque (with the oil seal) by using the special tool.

Standard value:

Bearing division	Bearing lubrication	Rotation torque Nm
New	None (With anti-rust agent)	0.98 – 1.27*1 0.49 – 0.69*2
New/reused	Gear oil applied	0.49 – 0.58*1 0.343 – 0.441*2

NOTE
*1: 4G9-M/T
*2: 4G1, 4G9-A/T

8. If the drive pinion rotation torque is not within the standard value, check the tightening torque of the companion flange self-locking nut and the oil seal installation condition.

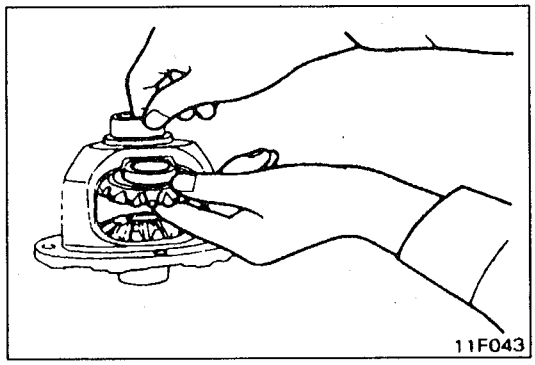

▶F◀ DIFFERENTIAL GEAR BACKLASH ADJUSTMENT

Follow the procedures below to adjust the differential gear backlash.

1. Assemble the side gears, side gear spacers, pinion gears and pinion washers into the differential case.
2. Temporarily install the pinion shaft.

   NOTE
   Do not drive in the lock pin yet.

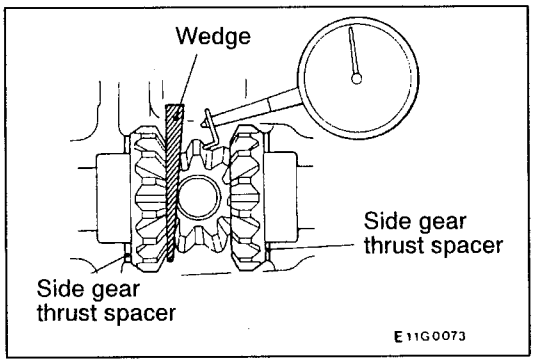

3. Insert a wedge between the side gear and the pinion shaft to lock the side gear.
4. Measure the differential gear backlash with a dial indicator on the pinion gear.

   Standard value: 0 – 0.076 mm

   Limit: 0.2 mm

   Repeat the steps above for the other pinion gear.
5. If the differential gear backlash exceeds the limit, adjust the backlash by changing the side gear spacers.
6. If adjustment is not possible, replace the side gears and pinion gears as a set.
7. Confirm that the differential gear backlash is correct, and that the differential gear turns smoothly.

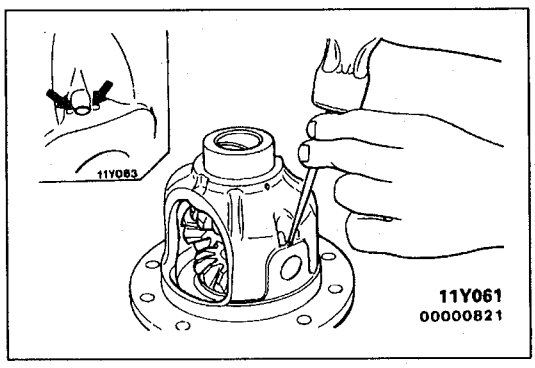

▶G◀ LOCK PIN INSTALLATION

1. Align the pinion shaft lock pin hole with the differential case lock pin hole, and drive in the lock pin.
2. Stake the lock pin with a punch at two points.

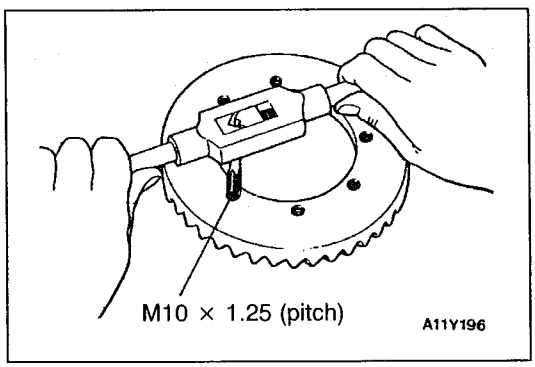

▶H◀ DRIVE GEAR INSTALLATION

1. Clean the drive gear attaching bolts.
2. Remove the adhesive adhered to the threaded holes of the drive gear by turning a tap (M10 x 1.25), and then clean the threaded holes by applying compressed air.

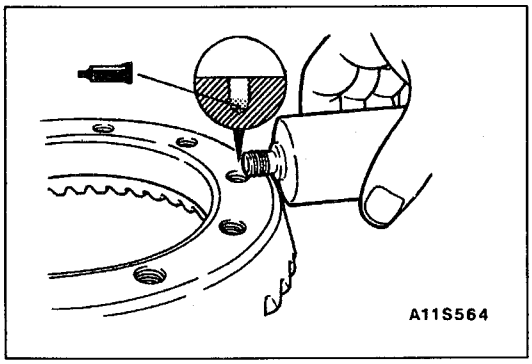

3. Clean the drive gear attaching surface, and then apply the specified adhesive to the threaded holes of the drive gear.

   Specified sealant:
   3M Stud Locking 4170 or equivalent

4. Install the drive gear onto the differential case with the mating marks properly aligned.
5. Tighten the drive gear attaching bolts provisionally, and then tighten them to the specified torque in a diagonal sequence.

   Tightening torque: 78 - 88 Nm

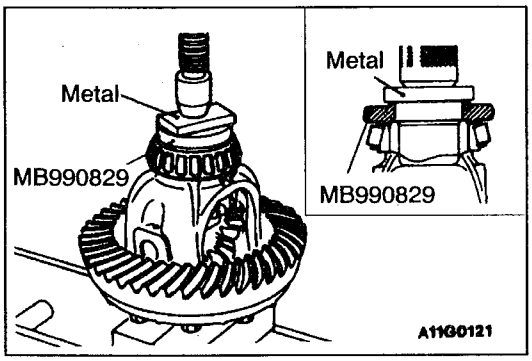

▶I◀ SIDE BEARING INNER RACE INSTALLATION

Use the special tool to press the side bearing inner race into the differential case.

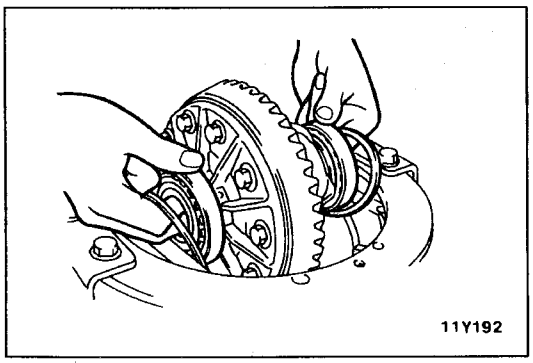

▶J◀ DRIVE GEAR BACKLASH ADJUSTMENT

Adjust the drive gear backlash by the following procedures:

1. Install the side bearing spacers, which are thinner than those removed, to the side bearing outer races, and then mount the differential case assembly into the gear carrier.

   NOTE
   Select side bearing spacers with the same thickness for both the drive gear sides.

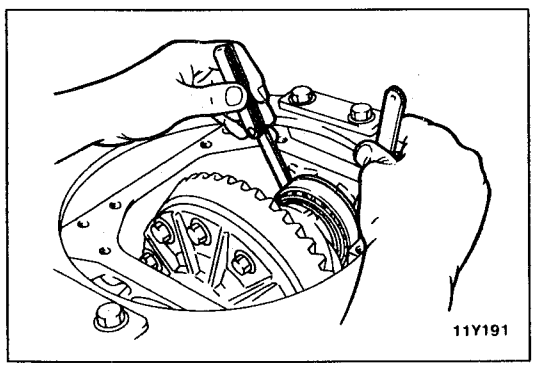

2. Push the differential case assembly to one side, and measure the clearance between the gear carrier and the side bearing spacer with a thickness gauge.

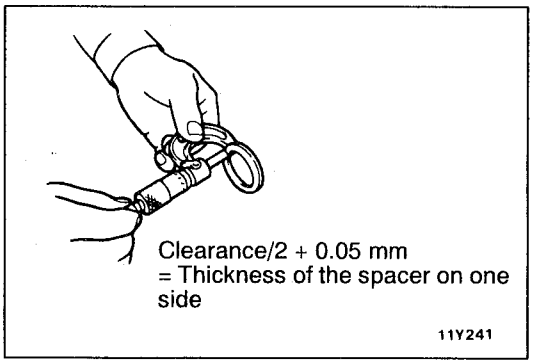

3. Measure the thickness of the side bearing spacers on one side, select two pairs of spacers which correspond to that thickness plus one half of the clearance plus 0.05 mm, and then install one pair each to the drive pinion side and the drive gear side.

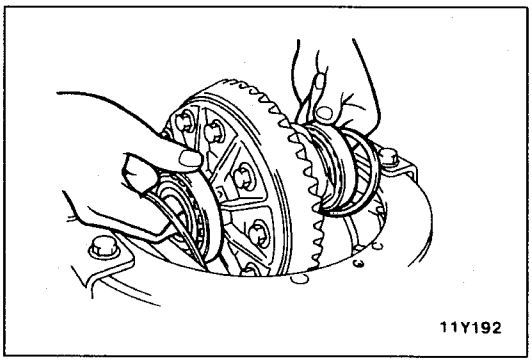

4. Install the selected side bearing spacers and differential case assembly, as shown in the illustration, to the gear carrier.

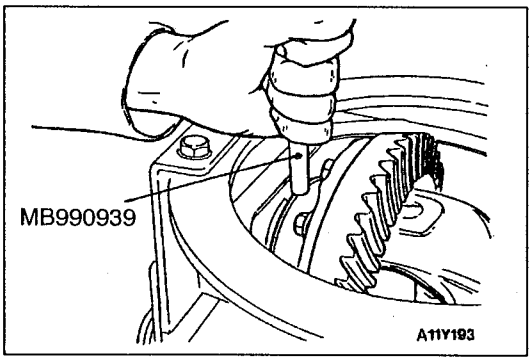

5. Tap the side bearing spacers with the special tool to fit them to the side bearing outer race.

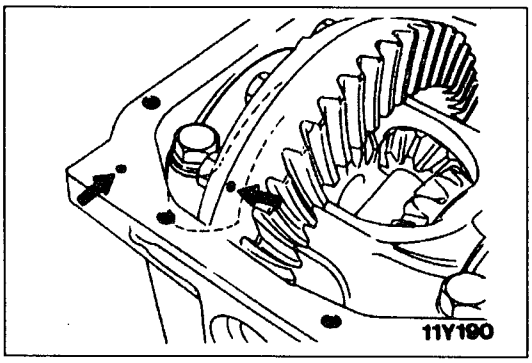

6. Align the mating marks on the gear carrier and the bearing cap, and then tighten the bearing cap.

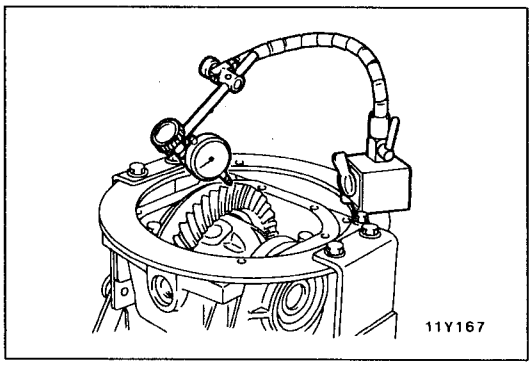

7. With the drive pinion locked in place, measure the drive gear backlash with a dial indicator on the drive gear.

   NOTE
   Measure at four points or more on the circumference of the drive gear.

   Standard value: 0.11 - 0.16 mm

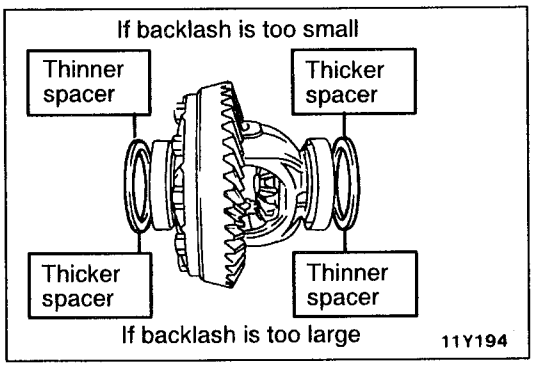

8. Change the side bearing spacers as illustrated, and then adjust the drive gear backlash.

   NOTE
   When increasing the number of side bearing spacers, decrease the same number of the side bearing spacers for opposite side.

9. Check the drive gear and drive pinion for tooth contact. If poor contact is evident, make adjustment. (Refer to P. 26-31.)

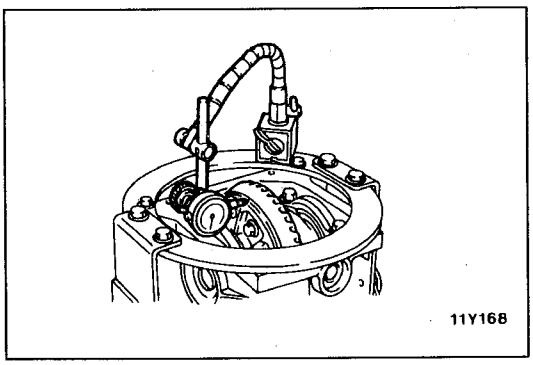

10. Measure the drive gear runout at the shoulder on the reverse side of the drive gear.

    Limit: 0.05 mm

11. If the drive gear runout exceeds the limit, reinstall by changing the phase of the drive gear and differential case, and remeasure.
12. If adjustment is not possible, replace the differential case or replace the drive gear and drive pinion as a set.

FREE-WHEELING CLUTCH ASSEMBLY

REMOVAL AND INSTALLATION

Caution

To prevent bushings from breakage, the parts indicated by * should be temporarily tightened, and then fully tightened with the vehicle on the ground in the unladen condition.

Pre-removal and Post-installation Operation
- Gear Oil Draining and Refilling (Refer to P.26-11.)
- Drive Shaft Removal and Installation (Refer to P.26-19.)

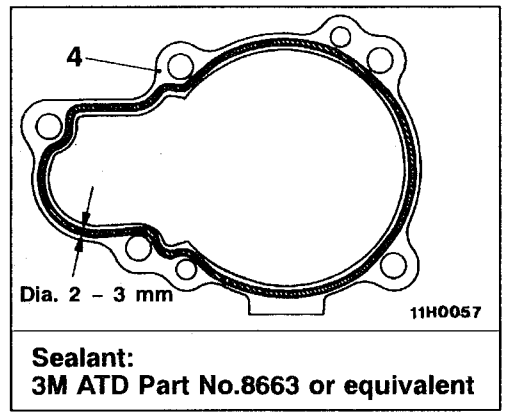

Sealant:
3M ATD Part No.8663 or equivalent

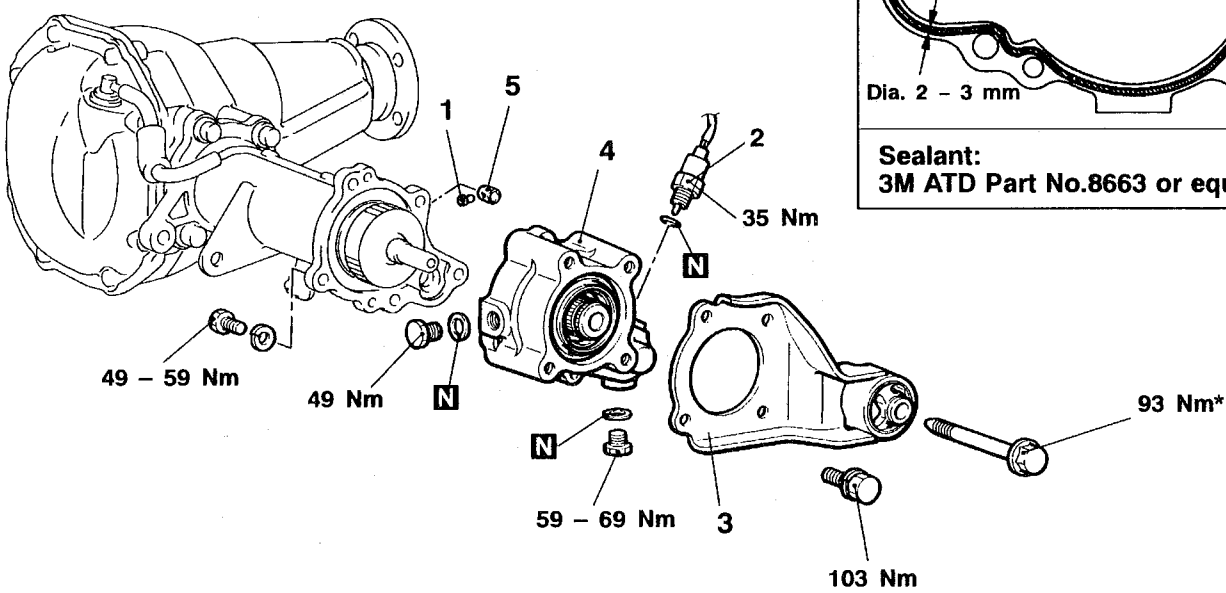

W0641AL
00009008

Removal steps

◀A▶ 1. Pin
2. Free-wheeling engage switch assembly
3. Differential mount bracket assembly <LH>
4. Free-wheeling clutch housing assembly
5. Collar

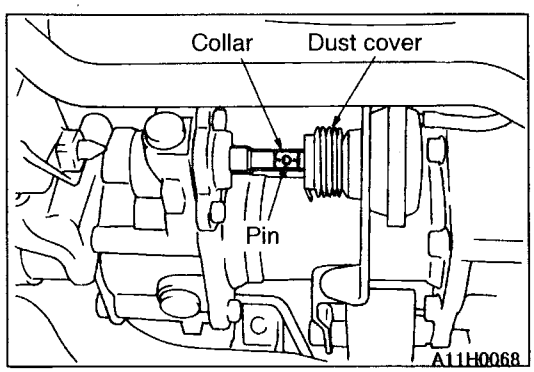

REMOVAL SERVICE POINT

◀A▶ PIN REMOVAL

1. Remove the one side of the dust cover from the vacuum actuator assembly.
2. Align the pin with the pin hole of the collar, and then drive out the pin with a punch.

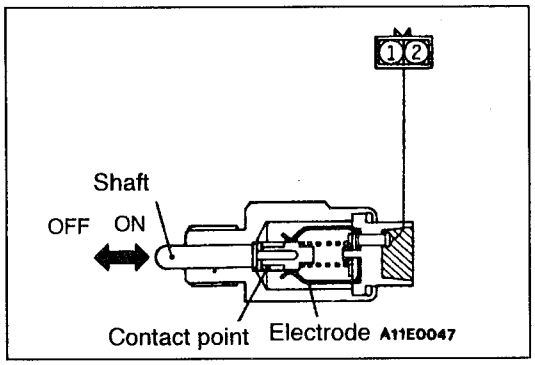

INSPECTION

FREE-WHEELING ENGAGE SWITCH CONTINUITY CHECK

Shaft (switch) position	Terminal number	
	1	2
Pushed (ON)	○	○
Released (OFF)		

DISASSEMBLY AND REASSEMBLY

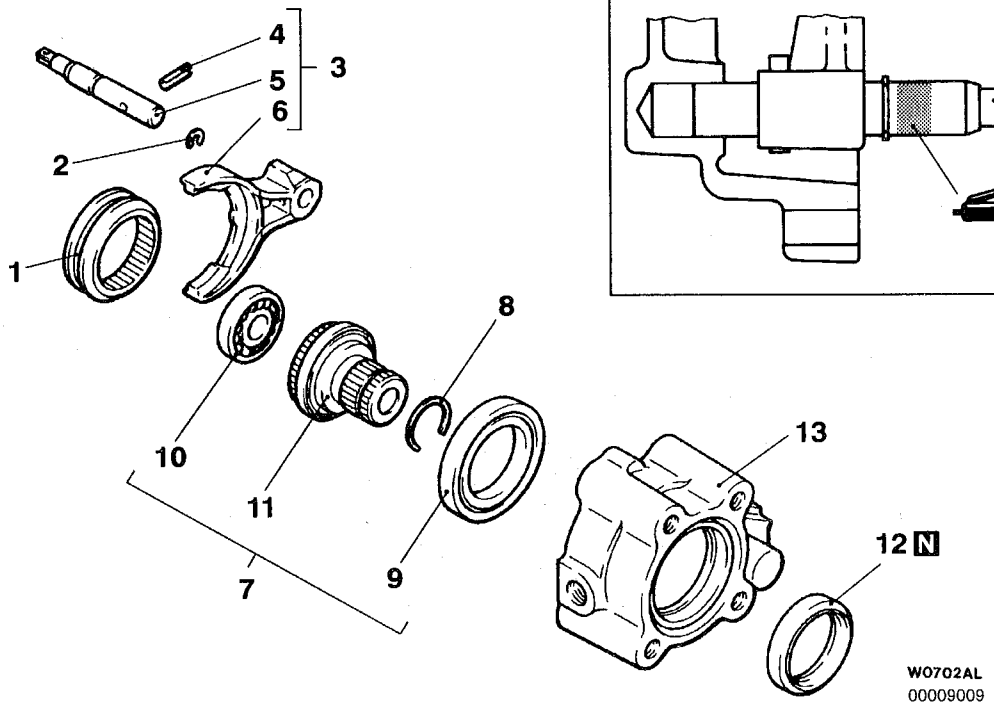

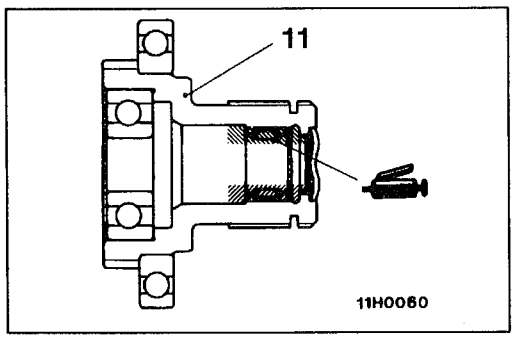

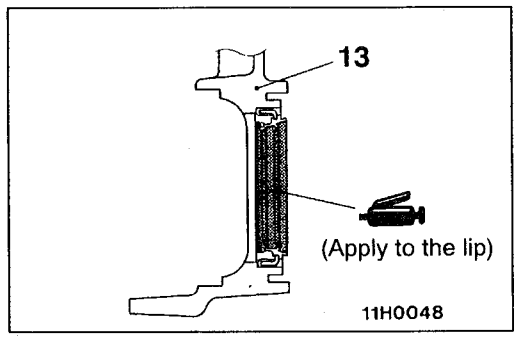

Disassembly steps

▶D◀ 1. Clutch sleeve
2. Snap ring
3. Shift fork assembly
▶C◀ 4. Spring pin
5. Shift rod
6. Shift fork
7. Clutch gear assembly
8. Circlip
◀A▶ ▶B◀ 9. Bearing
10. Bearing
11. Clutch gear
▶A◀ 12. Oil seal
13. Free-wheeling clutch housing

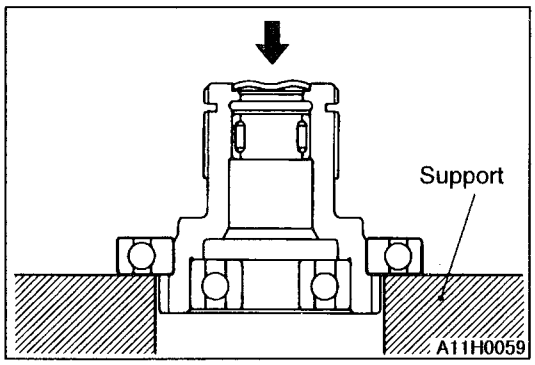

DISASSEMBLY SERVICE POINT

◀A▶ BEARING REMOVAL

Position the bearing inner race on a support. Then use a press to separate the clutch gear from the bearing.

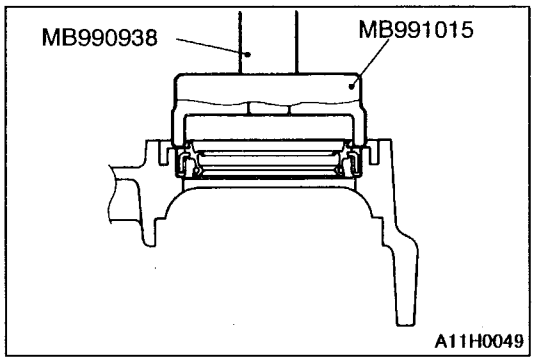

REASSEMBLY SERVICE POINTS

▶A◀ OIL SEAL INSTALLATION

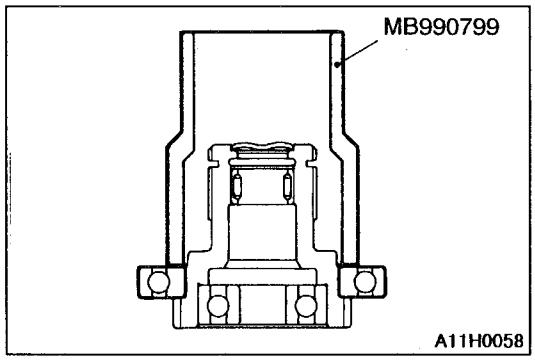

▶B◀ BEARING INSTALLATION

Use the special tool to press-fit the bearing to the shoulder of the clutch gear.

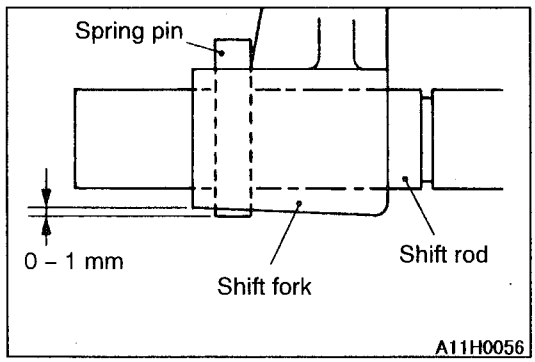

▶C◀ SPRING PIN INSTALLATION

Insert the spring pin into the pin hole (with chamfered surface) of the shift rod, and then tap the spring pin in as shown in the illustration.

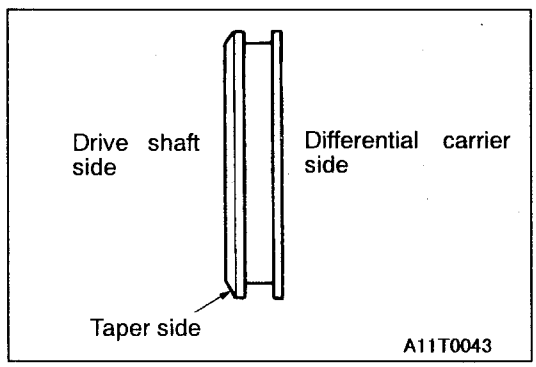

▶D◀ CLUTCH SLEEVE INSTALLATION

Face the clutch sleeve tapered side towards the drive shaft to install the clutch sleeve.

SOLENOID VALVE, VACUUM PIPES AND VACUUM TANK

REMOVAL AND INSTALLATION

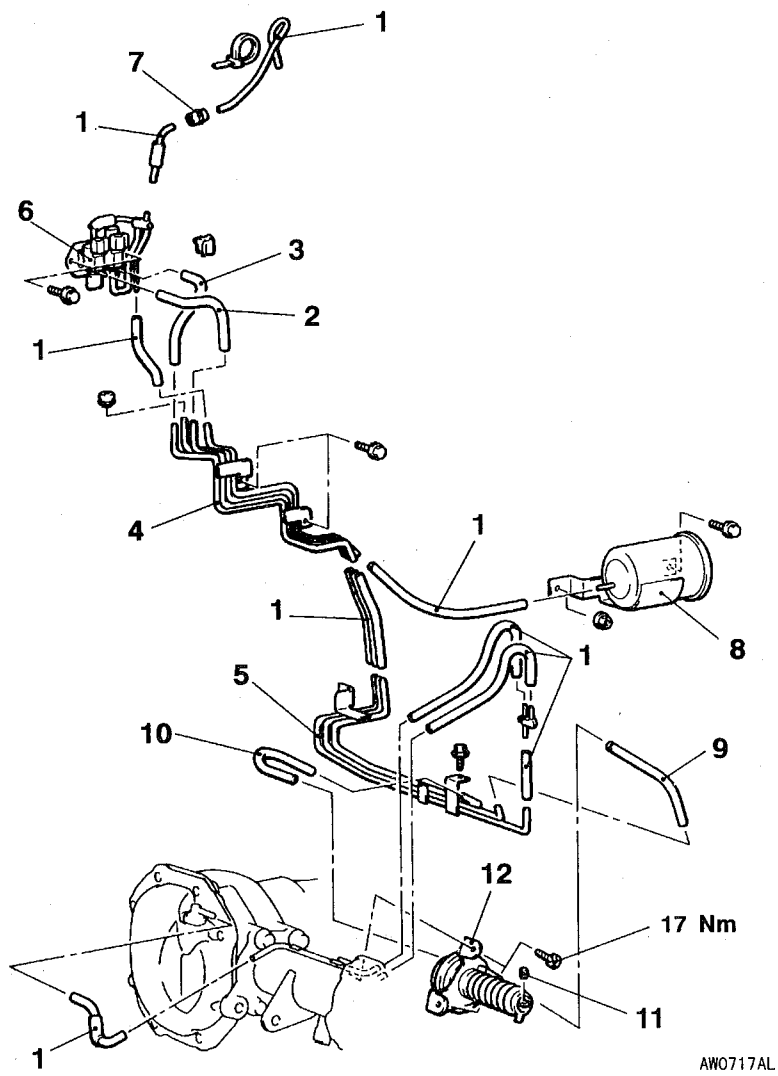

1. Vacuum hose
▶A◀ 2. Vacuum hose <blue stripe>
▶A◀ 3. Vacuum hose <yellow stripe>
4. Vacuum pipe assembly
5. Vacuum pipe assembly
6. Solenoid valve assembly
▶B◀ 7. Check valve
8. Vacuum tank assembly

Vacuum actuator assembly removal steps

▶A◀ 9. Vacuum hose <blue stripe> connection
▶A◀ 10. Vacuum hose <yellow stripe> connection
◀A▶ 11. Pin
12. Vacuum actuator assembly

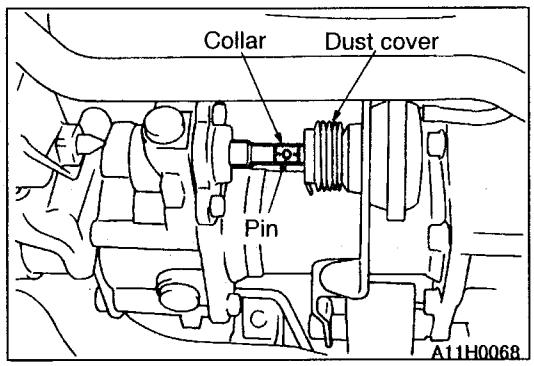

REMOVAL SERVICE POINT

◀A▶ PIN REMOVAL

1. Remove the one side of the dust cover from the vacuum actuator assembly.
2. Align the pin with the pin hole of the collar, and then drive out the pin with a punch.

INSTALLATION SERVICE POINTS

▶A◀ VACUUM HOSE INSTALLATION

Connect the vacuum hoses, the solenoid valve and the vacuum pipes according to their identification colours.

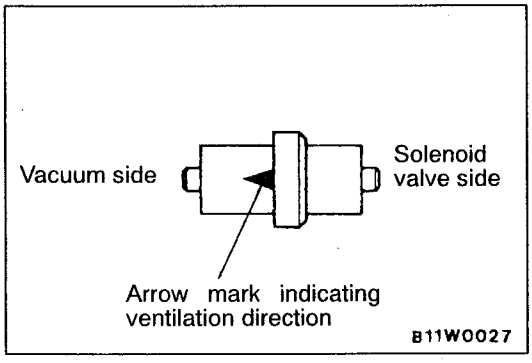

▶B◀ CHECK VALVE INSTALLATION

Face the arrow mark to the vacuum side.

FRONT DIFFERENTIAL MOUNT

REMOVAL AND INSTALLATION

Caution

1. **To remove the differential mount crossmember assembly, support the front differential assembly with a jack.**
2. **To prevent bushings from breakage, the parts indicated by * should be temporarily tightened, and then fully tightened with the vehicle on the ground in the unladen condition.**

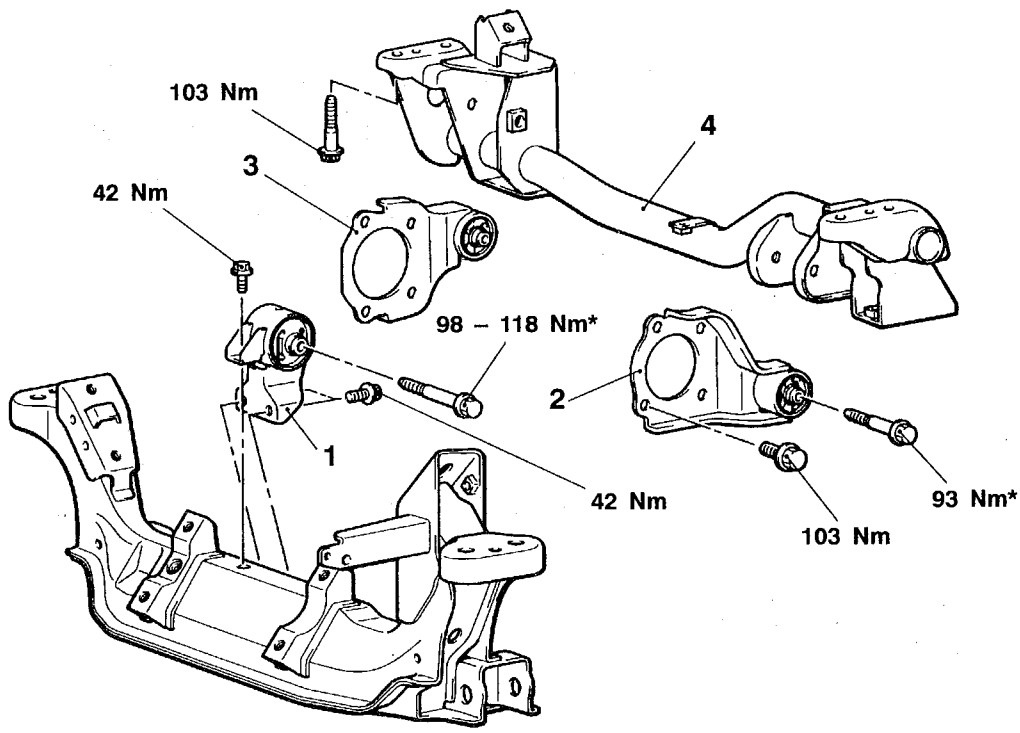

AW0701AL

Differential mount bracket assembly (front) removal steps

- Free-wheeling clutch assembly removal (Refer to P. 26-45.)

1. Differential mount bracket assembly <front>

Differential mount bracket assembly (LH, RH) removal steps

- Drive shaft assembly removal (Refer to P. 26-19.)

2. Differential mount bracket assembly <Rear – LH>
3. Differential mount bracket <Rear – RH>

Differential mount crossmember assembly removal steps

- Front propeller shaft removal (Refer to GROUP 25.)

4. Differential mount crossmember assembly

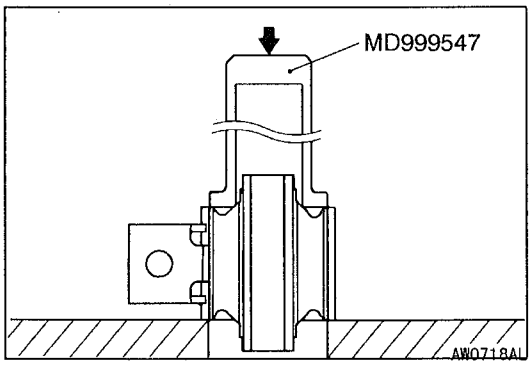

DIFFERENTIAL MOUNT INSULATOR REPLACEMENT

FRONT

1. Use the special tool to drive out the insulator.

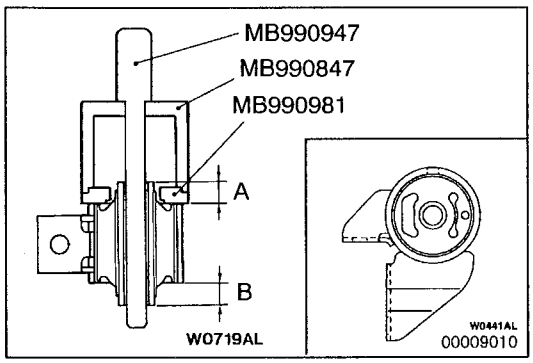

2. Use the special tools and a press to press-fit the insulators so that their hollow portion points to the shown direction and the insulator protrudes evenly (Distance A is equal to distance B).

REAR

1. Use the special tool to drive out the insulator.

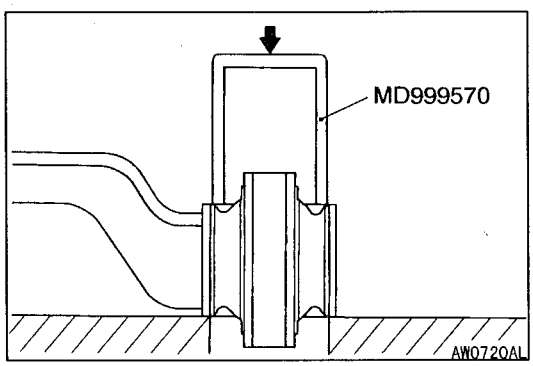

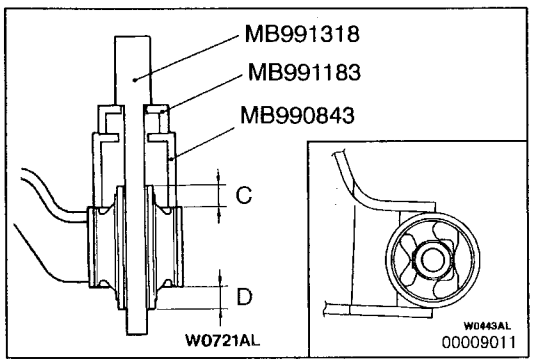

2. Use the special tools and a press to press-fit the insulators so that their hollow portion points to the shown direction and the insulator protrudes evenly (Distance C is equal to distance D).

NOTES